REVISIONS			
REV.	DESCRIPTION	BY	DATE
B	UPDATED FORMAT	MJP	09/23/26

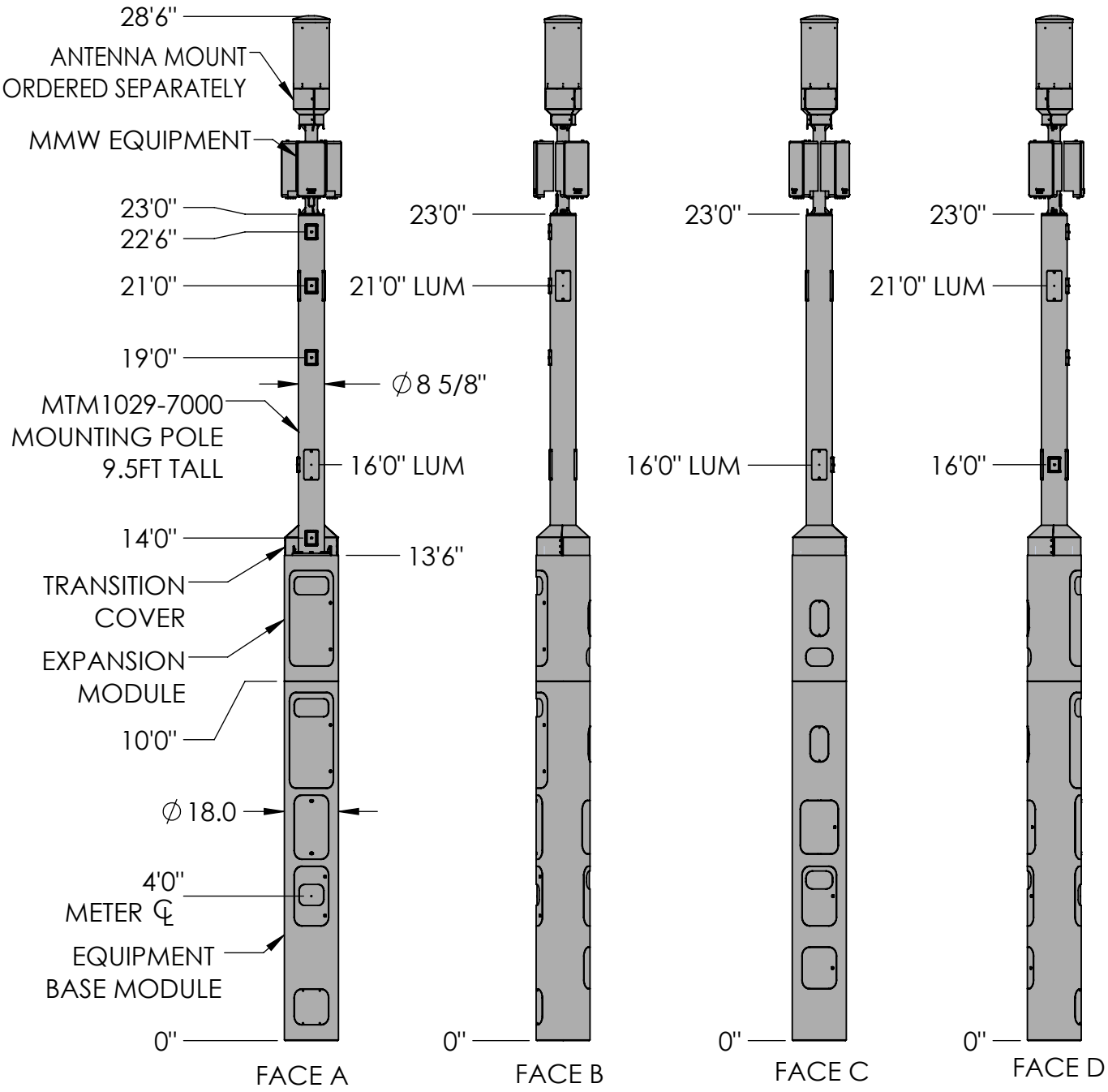

These drawings and specifications are the proprietary property of CommScope Inc. and may be used only for the specific purpose authorized in writing by CommScope Inc.

ALL DIMENSIONS ARE IN INCHES U.O.S.
TOLERANCES UNLESS OTHERWISE SPECIFIED:

.X = ±	.12	ANGLES	±2°
.XX = ±	.06	FRACTIONS	±1/32
.XXX= ±	.031		

REMOVE BURRS AND BREAK EDGES .005

DO NOT SCALE THIS PRINT

DRAWN BY: MJP	SHEET: 1 of 1	PART NUMBER: 760243184xx23xS
CHECKED BY:	SCALE:	DESCRIPTION: METRO CELL, 18 IN INTEGRATED POLE SOLUTION
DATE:	MATERIAL:	DRAWING TYPE:
REVISION: B	FINISH:	ANDREW an Amphenol company
	WEIGHT:	

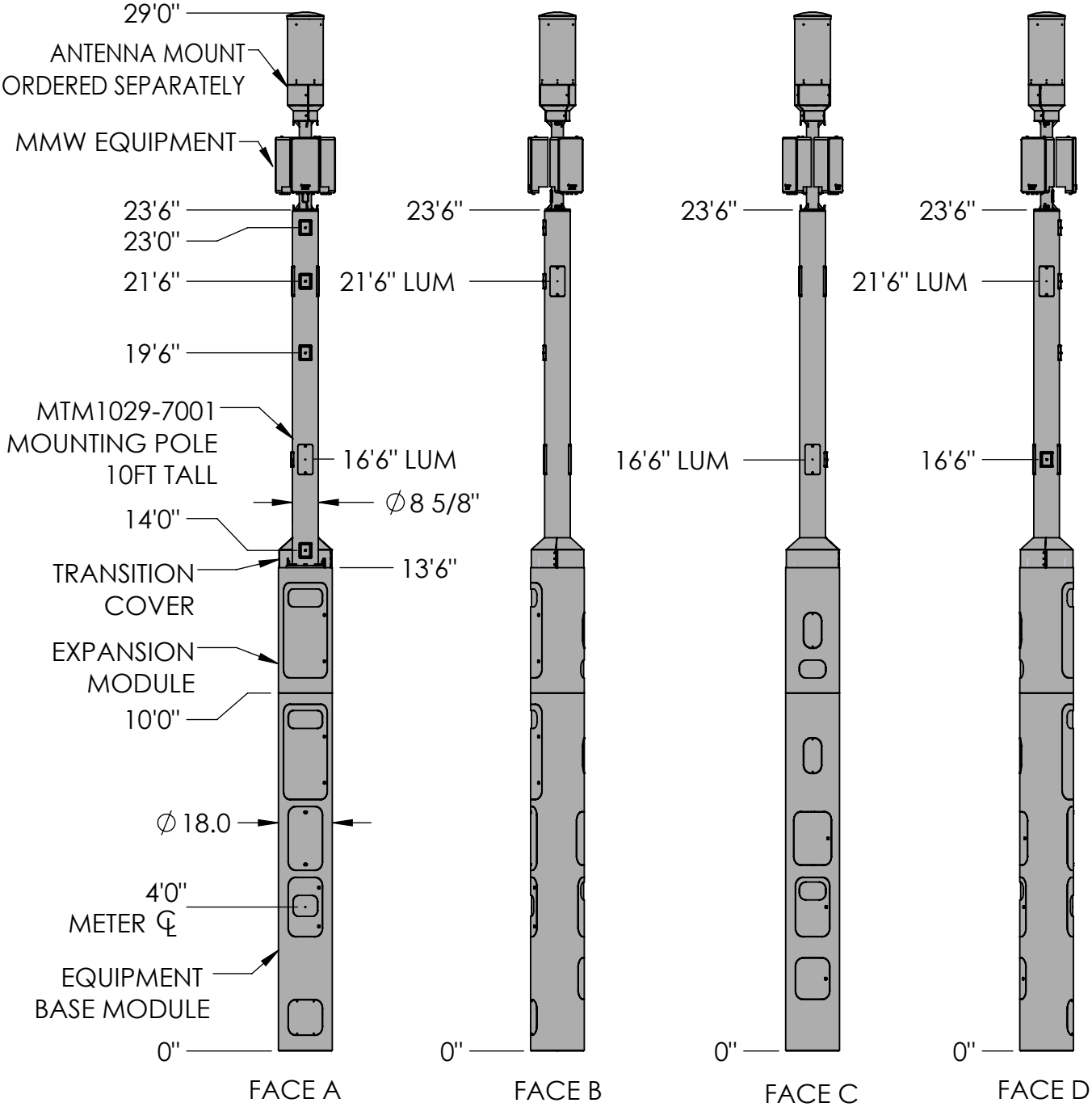

These drawings and specifications are the proprietary property of CommScope Inc. and may be used only for the specific purpose authorized in writing by CommScope Inc.

ALL DIMENSIONS ARE IN INCHES U.O.S.
TOLERANCES UNLESS OTHERWISE SPECIFIED:

.X = ±	.12	ANGLES	±2°
.XX = ±	.06	FRACTIONS	±1/32
.XXX= ±	.031		

REMOVE BURRS AND BREAK EDGES .005

DO NOT SCALE THIS PRINT

DRAWN BY: MJP	SHEET: 1 of 1	PART NUMBER: 760243184xx24xS
CHECKED BY:	SCALE:	DESCRIPTION: METRO CELL, 18 IN INTEGRATED POLE SOLUTION
DATE:	MATERIAL:	DRAWING TYPE:
REVISION: B	FINISH:	COMMSCOPE®
	WEIGHT:	

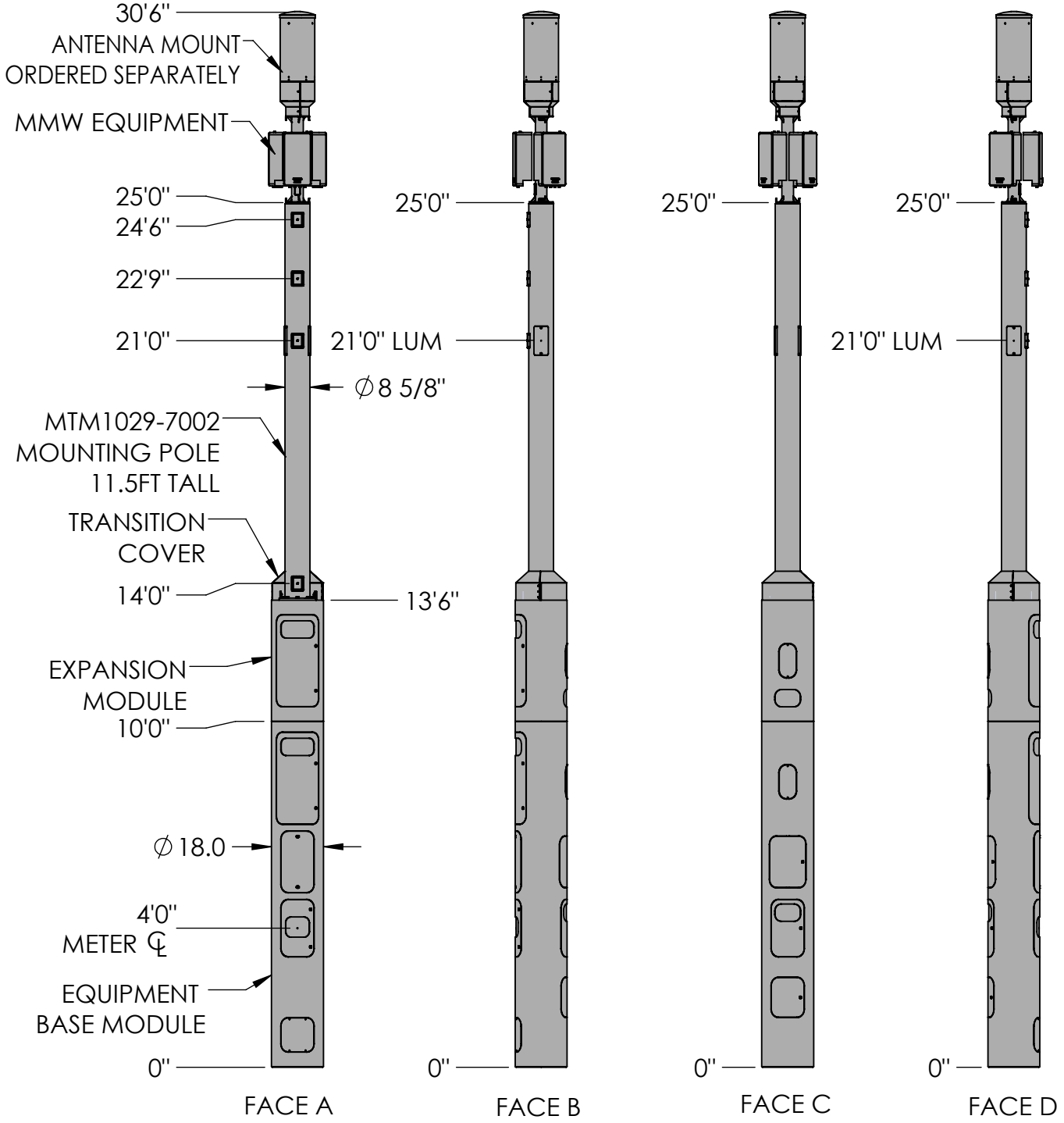

These drawings and specifications are the proprietary property of CommScope Inc. and may be used only for the specific purpose authorized in writing by CommScope Inc.

ALL DIMENSIONS ARE IN INCHES U.O.S.
TOLERANCES UNLESS OTHERWISE SPECIFIED:

.X = ±	.12	ANGLES	±2°
.XX = ±	.06	FRACTIONS	±1/32
.XXX= ±	.031		

REMOVE BURRS AND BREAK EDGES .005

DO NOT SCALE THIS PRINT

DRAWN BY: MJP	SHEET: 1 of 1	PART NUMBER: 760243184xx25xS
CHECKED BY:	SCALE:	DESCRIPTION: METRO CELL, 18 IN INTEGRATED POLE SOLUTION
DATE:	MATERIAL:	DRAWING TYPE:
REVISION: B	FINISH:	COMMSCOPE®
	WEIGHT:	

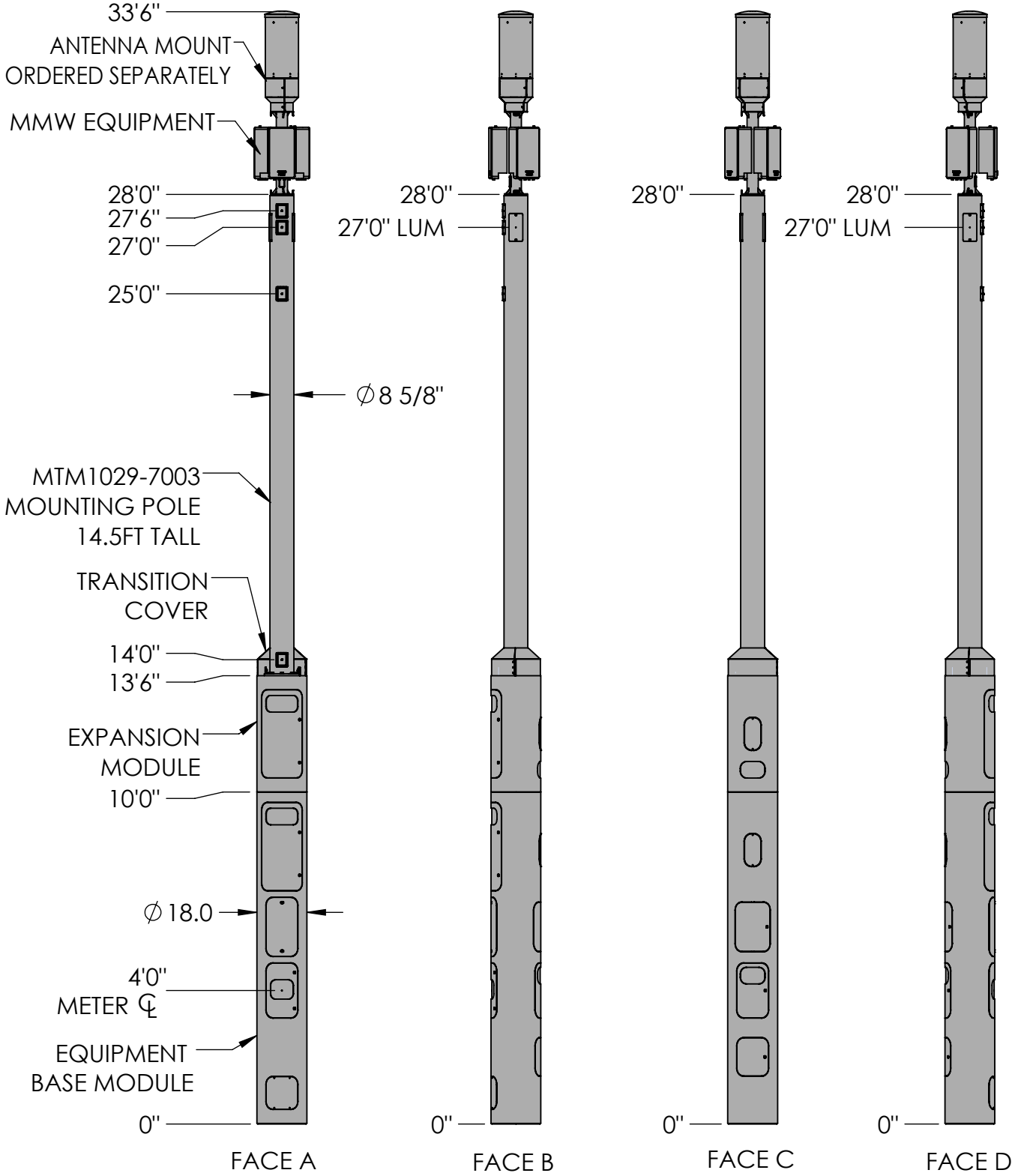

These drawings and specifications are the proprietary property of CommScope Inc. and may be used only for the specific purpose authorized in writing by CommScope Inc.

ALL DIMENSIONS ARE IN INCHES U.O.S.
TOLERANCES UNLESS OTHERWISE SPECIFIED:

.X = ±	.12	ANGLES	±2°
.XX = ±	.06	FRACTIONS	±1/32
.XXX= ±	.031		

REMOVE BURRS AND BREAK EDGES .005

DO NOT SCALE THIS PRINT

DRAWN BY: MJP	SHEET: 1 of 1	PART NUMBER: 760243184xx28xS
CHECKED BY:	SCALE:	DESCRIPTION: METRO CELL, 18 IN INTEGRATED POLE SOLUTION
DATE:	MATERIAL:	DRAWING TYPE:
REVISION: B	FINISH:	COMMSCOPE®
	WEIGHT:	

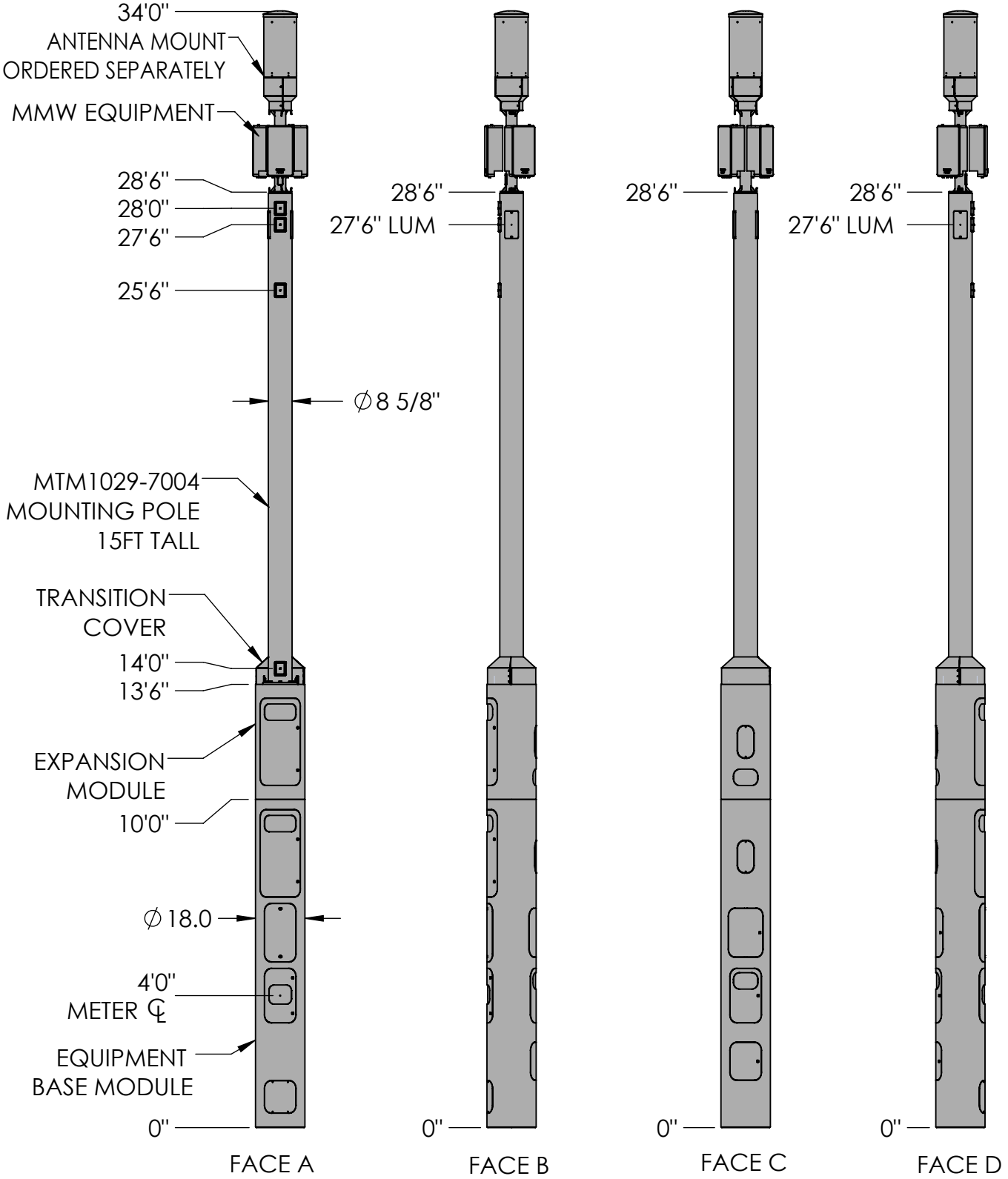

These drawings and specifications are the proprietary property of CommScope Inc. and may be used only for the specific purpose authorized in writing by CommScope Inc.

ALL DIMENSIONS ARE IN INCHES U.O.S.
TOLERANCES UNLESS OTHERWISE SPECIFIED:

.X = ±	.12	ANGLES	±2°
.XX = ±	.06	FRACTIONS	±1/32
.XXX= ±	.031		

REMOVE BURRS AND BREAK EDGES .005

DO NOT SCALE THIS PRINT

DRAWN BY: MJP	SHEET: 1 of 1	PART NUMBER: 760243184xx29xS
CHECKED BY:	SCALE:	DESCRIPTION: METRO CELL, 18 IN INTEGRATED POLE SOLUTION
DATE:	MATERIAL:	DRAWING TYPE:
REVISION: B	FINISH:	COMMSCOPE®
	WEIGHT:	

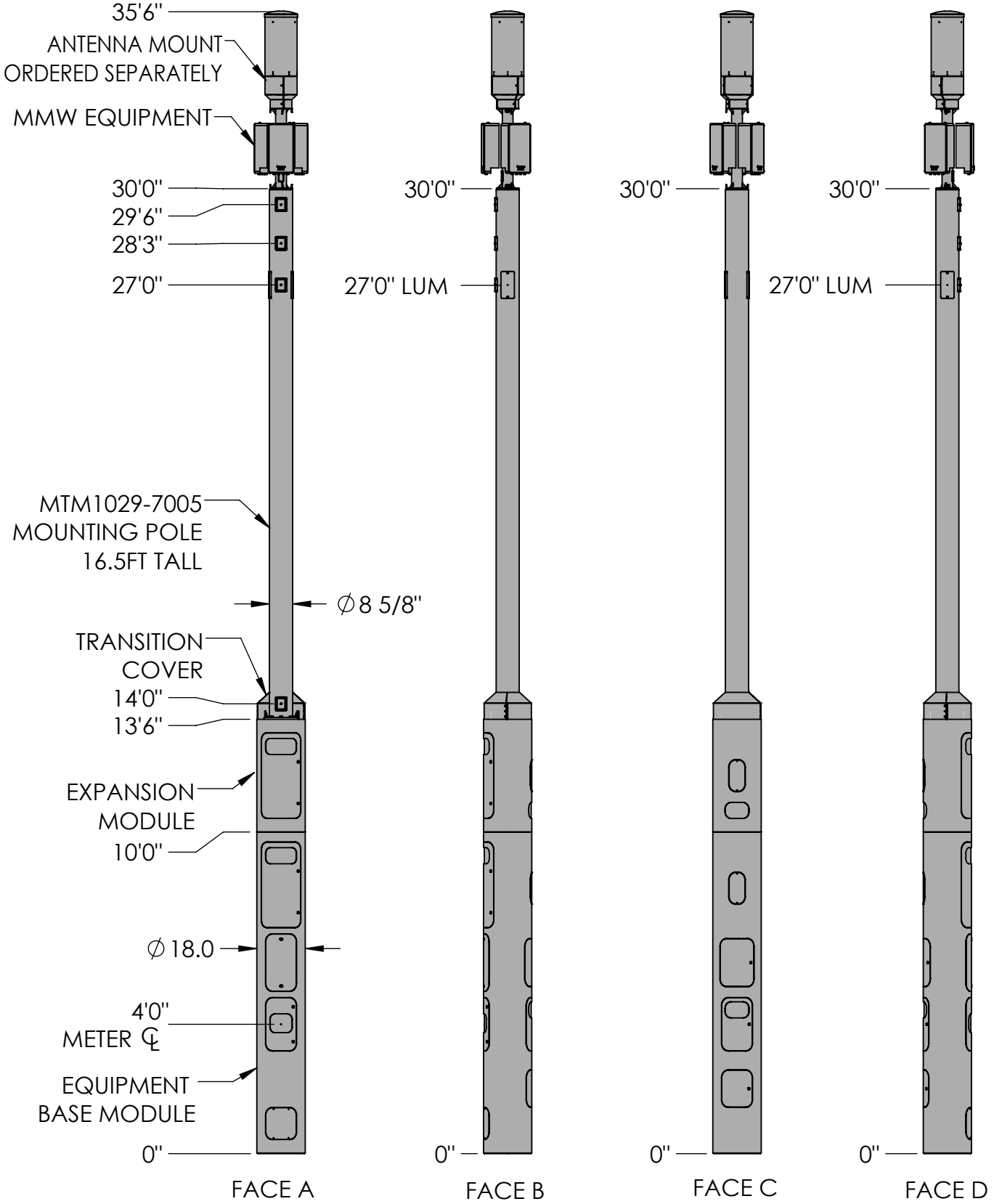

These drawings and specifications are the proprietary property of CommScope Inc. and may be used only for the specific purpose authorized in writing by CommScope Inc.

ALL DIMENSIONS ARE IN INCHES U.O.S.
TOLERANCES UNLESS OTHERWISE SPECIFIED:

.X = ±	.12	ANGLES	±2°
.XX = ±	.06	FRACTIONS	±1/32
.XXX= ±	.031		

REMOVE BURRS AND BREAK EDGES .005

DO NOT SCALE THIS PRINT

DRAWN BY: MJP	SHEET: 1 of 1	PART NUMBER: 760243184xx30xS
CHECKED BY:	SCALE:	DESCRIPTION: METRO CELL, 18 IN INTEGRATED POLE SOLUTION
DATE:	MATERIAL:	DRAWING TYPE:
REVISION: B	FINISH:	COMMSCOPE®
	WEIGHT:	

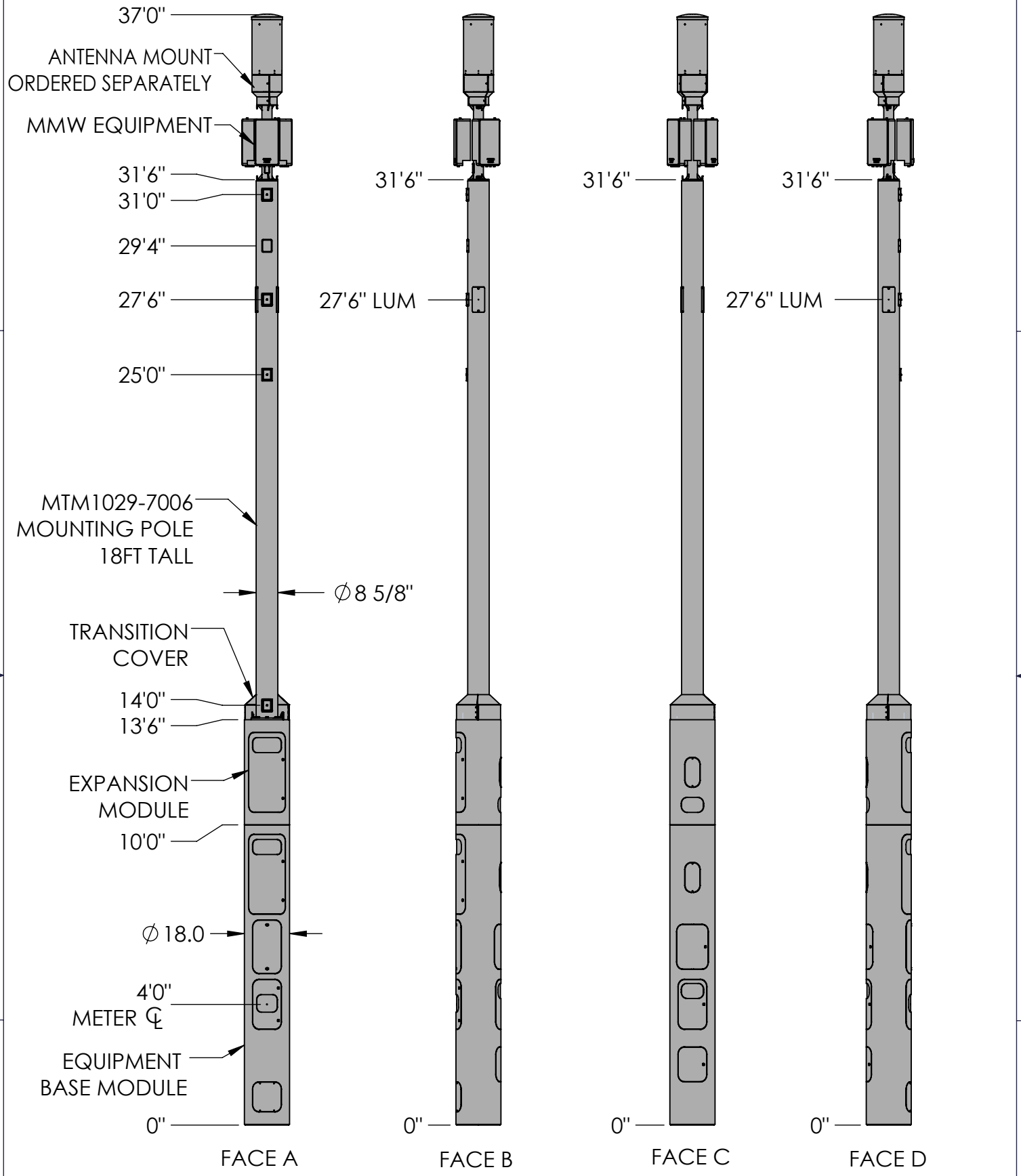

These drawings and specifications are the proprietary property of CommScope Inc. and may be used only for the specific purpose authorized in writing by CommScope Inc.

ALL DIMENSIONS ARE IN INCHES U.O.S.
TOLERANCES UNLESS OTHERWISE SPECIFIED:

.X = ±	.12	ANGLES	±2°
.XX = ±	.06	FRACTIONS	±1/32
.XXX= ±	.031		

REMOVE BURRS AND BREAK EDGES .005

DO NOT SCALE THIS PRINT

DRAWN BY: MJP	SHEET: 1 of 1	PART NUMBER: 760243184xx32xS
CHECKED BY:	SCALE:	DESCRIPTION: METRO CELL, 18 IN INTEGRATED POLE SOLUTION
DATE:	MATERIAL:	DRAWING TYPE:
REVISION: B	FINISH:	COMMSCOPE®
	WEIGHT:	

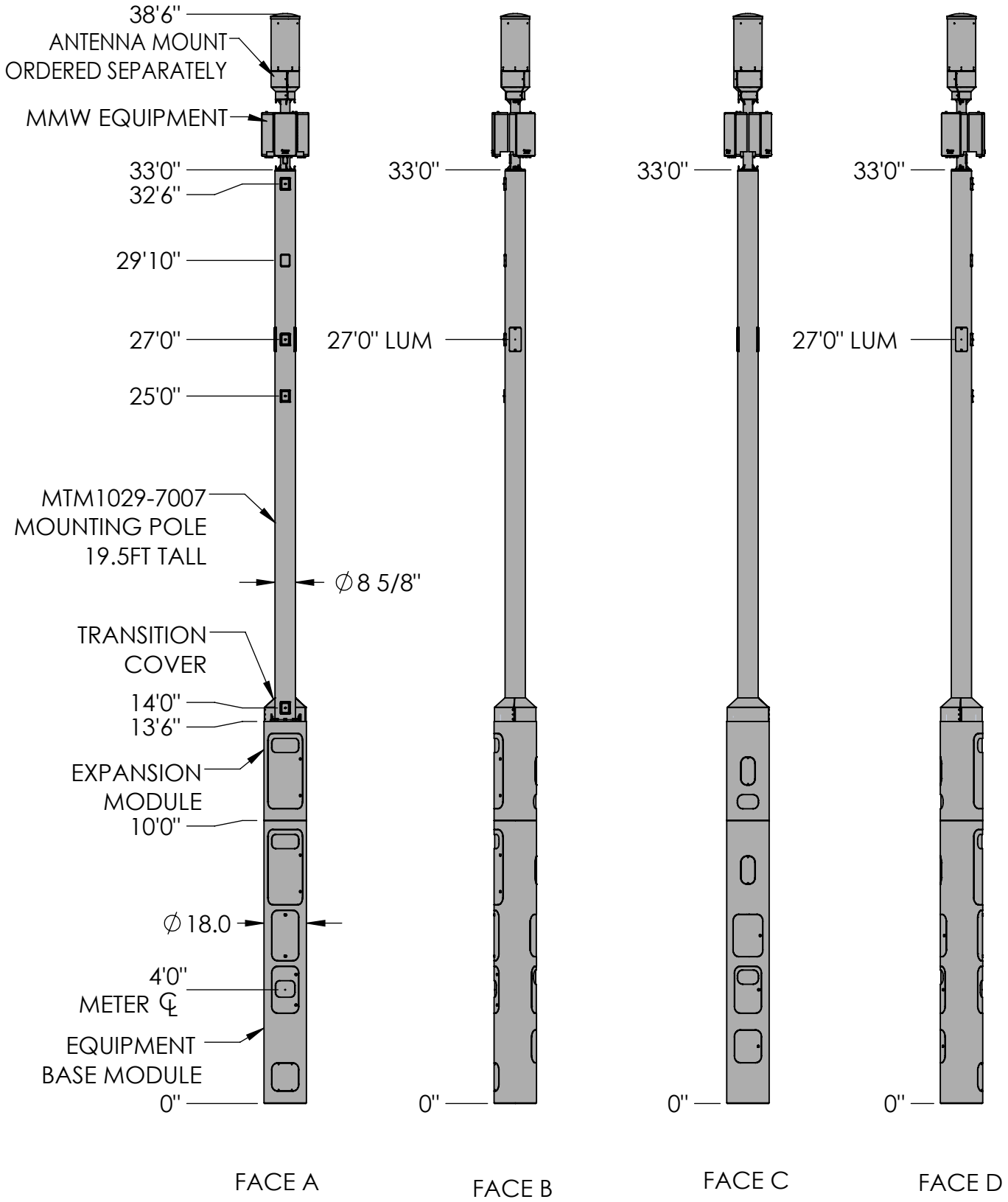

These drawings and specifications are the proprietary property of CommScope Inc. and may be used only for the specific purpose authorized in writing by CommScope Inc.

ALL DIMENSIONS ARE IN INCHES U.O.S.
TOLERANCES UNLESS OTHERWISE SPECIFIED:

.X = ±	.12	ANGLES	±2°
.XX = ±	.06	FRACTIONS	±1/32
.XXX= ±	.031		

REMOVE BURRS AND BREAK EDGES .005

DO NOT SCALE THIS PRINT

DRAWN BY: MJP	SHEET: 1 of 1	PART NUMBER: 760243184xx33xS
CHECKED BY:	SCALE:	DESCRIPTION: METRO CELL, 18 IN INTEGRATED POLE SOLUTION
DATE:	MATERIAL:	DRAWING TYPE:
REVISION: B	FINISH:	COMMSCOPE®
	WEIGHT:	

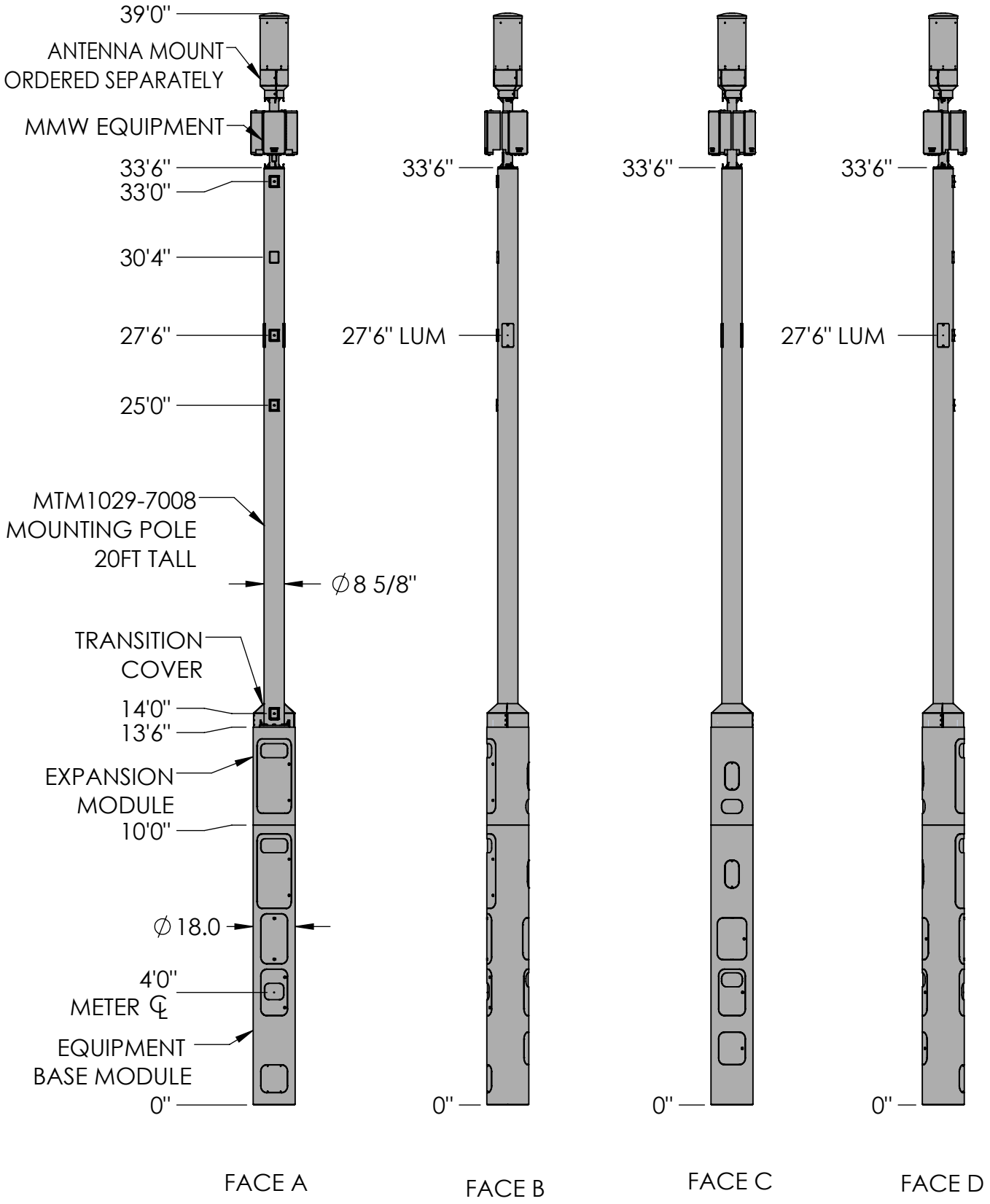

These drawings and specifications are the proprietary property of CommScope Inc. and may be used only for the specific purpose authorized in writing by CommScope Inc.

ALL DIMENSIONS ARE IN INCHES U.O.S.
TOLERANCES UNLESS OTHERWISE SPECIFIED:

.X = ±	.12	ANGLES	±2°
.XX = ±	.06	FRACTIONS	±1/32
.XXX= ±	.031		

REMOVE BURRS AND BREAK EDGES .005

DO NOT SCALE THIS PRINT

DRAWN BY: MJP	SHEET: 1 of 1	PART NUMBER: 760243184xx34xS
CHECKED BY:	SCALE:	DESCRIPTION: METRO CELL, 18 IN INTEGRATED POLE SOLUTION
DATE:	MATERIAL:	DRAWING TYPE:
REVISION: B	FINISH:	COMMSCOPE®
	WEIGHT:	

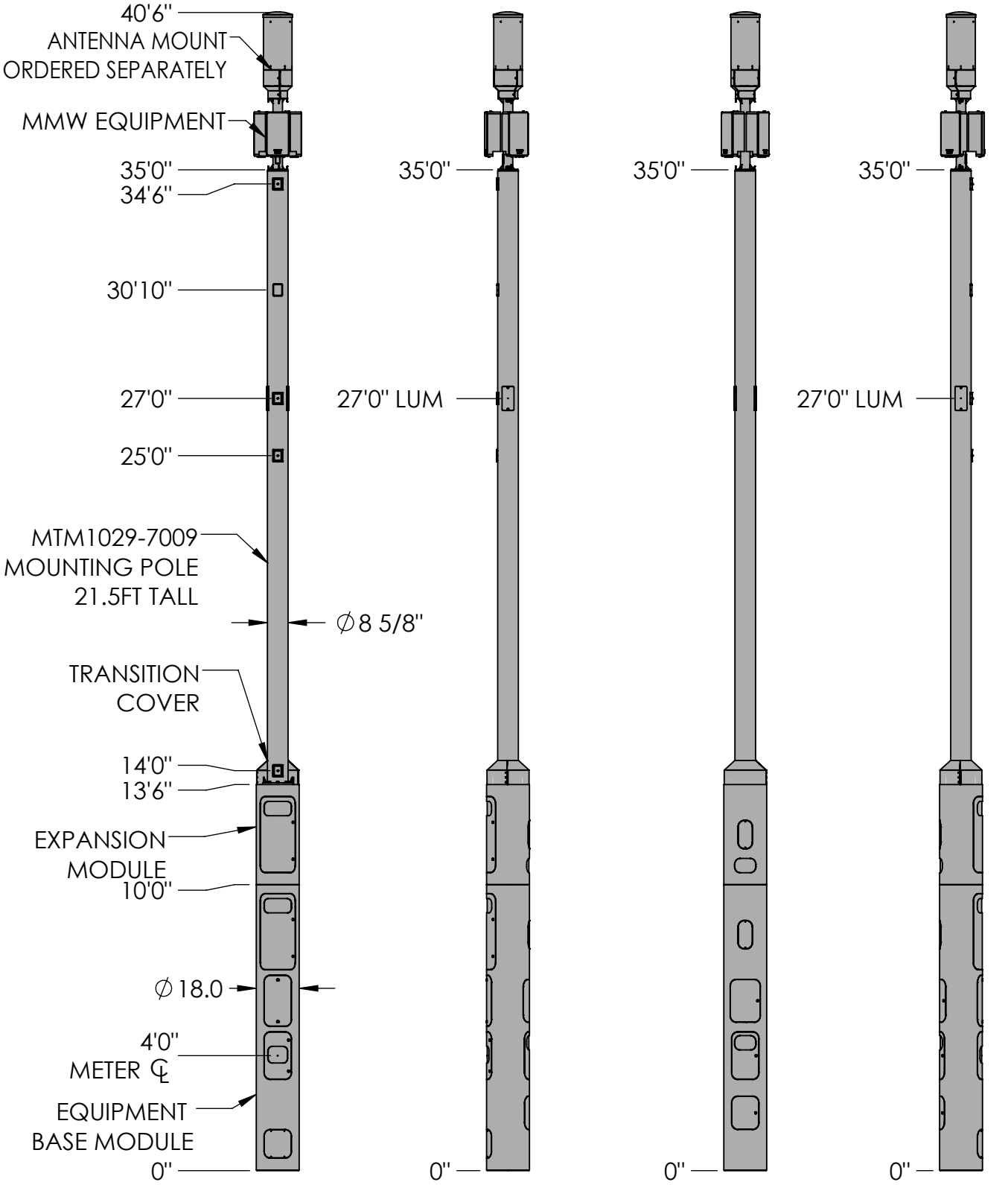

These drawings and specifications are the proprietary property of CommScope Inc. and may be used only for the specific purpose authorized in writing by CommScope Inc.

ALL DIMENSIONS ARE IN INCHES U.O.S.
TOLERANCES UNLESS OTHERWISE SPECIFIED:

.X = ±	.12	ANGLES	±2°
.XX = ±	.06	FRACTIONS	±1/32
.XXX= ±	.031		

REMOVE BURRS AND BREAK EDGES .005

DO NOT SCALE THIS PRINT

DRAWN BY: MJP	SHEET: 1 of 1	PART NUMBER: 760243184xx35xS
CHECKED BY:	SCALE:	DESCRIPTION: METRO CELL, 18 IN INTEGRATED POLE SOLUTION
DATE:	MATERIAL:	DRAWING TYPE:
REVISION: B	FINISH:	COMMSCOPE®
	WEIGHT:	

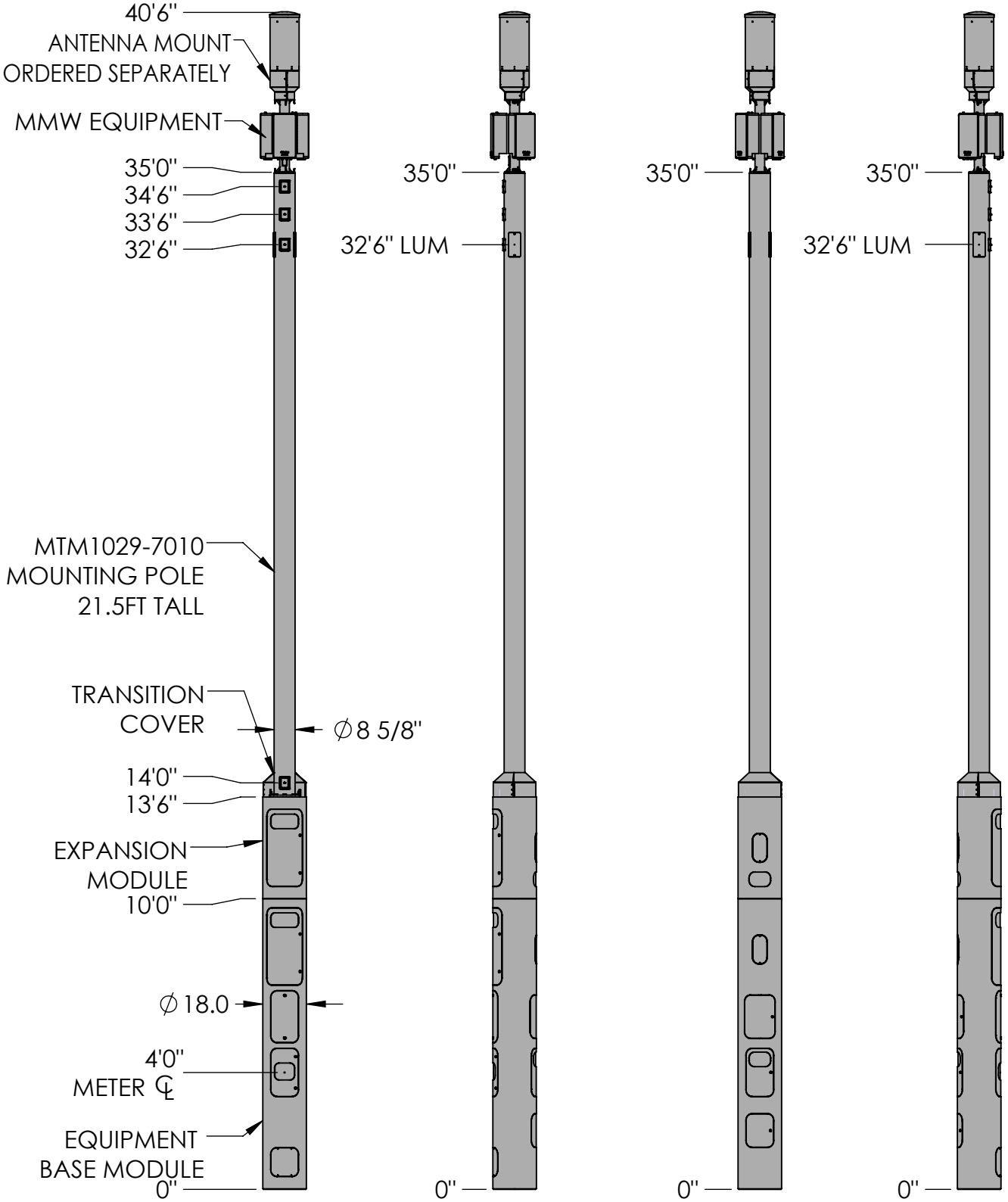

FACE A FACE B FACE C FACE D

These drawings and specifications are the proprietary property of CommScope Inc. and may be used only for the specific purpose authorized in writing by CommScope Inc.

ALL DIMENSIONS ARE IN INCHES U.O.S.
TOLERANCES UNLESS OTHERWISE SPECIFIED:

.X = ±	.12	ANGLES	±2°
.XX = ±	.06	FRACTIONS	±1/32
.XXX= ±	.031		

REMOVE BURRS AND BREAK EDGES .005

DO NOT SCALE THIS PRINT

DRAWN BY: MJP	SHEET: 1 of 1	PART NUMBER: 760243184xx35xS
CHECKED BY:	SCALE:	DESCRIPTION: METRO CELL, 18 IN INTEGRATED POLE SOLUTION
DATE:	MATERIAL:	DRAWING TYPE:
REVISION: B	FINISH:	COMMSCOPE®
	WEIGHT:	

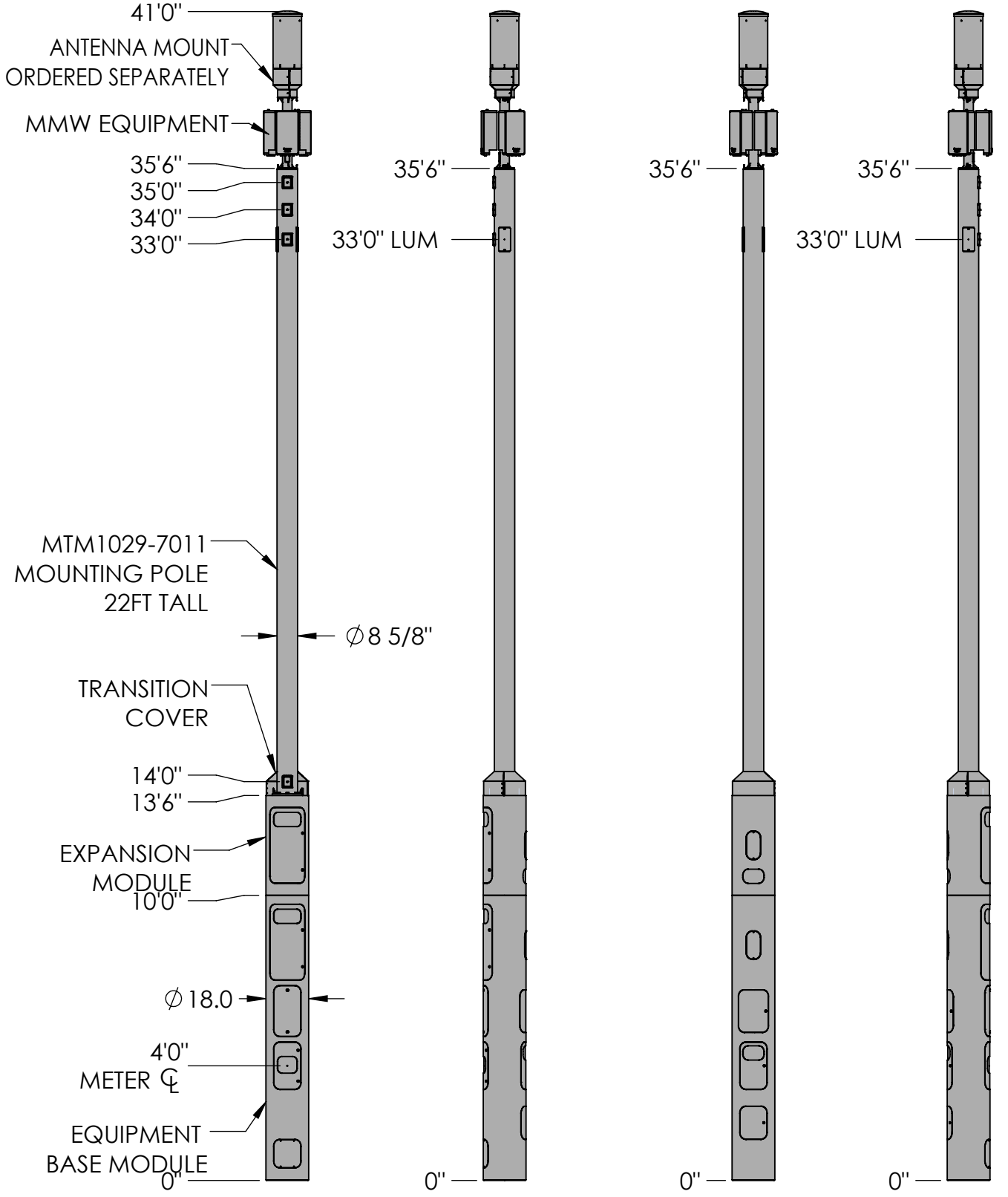

These drawings and specifications are the proprietary property of CommScope Inc. and may be used only for the specific purpose authorized in writing by CommScope Inc.

ALL DIMENSIONS ARE IN INCHES U.O.S.
TOLERANCES UNLESS OTHERWISE SPECIFIED:

.X = ±	.12	ANGLES	±2°
.XX = ±	.06	FRACTIONS	±1/32
.XXX= ±	.031		

REMOVE BURRS AND BREAK EDGES .005

DO NOT SCALE THIS PRINT

DRAWN BY: MJP	SHEET: 1 of 1	PART NUMBER: 760243184xx36xS
CHECKED BY:	SCALE:	DESCRIPTION: METRO CELL, 18 IN INTEGRATED POLE SOLUTION
DATE:	MATERIAL:	DRAWING TYPE:
REVISION: B	FINISH:	COMMSCOPE®
	WEIGHT:	

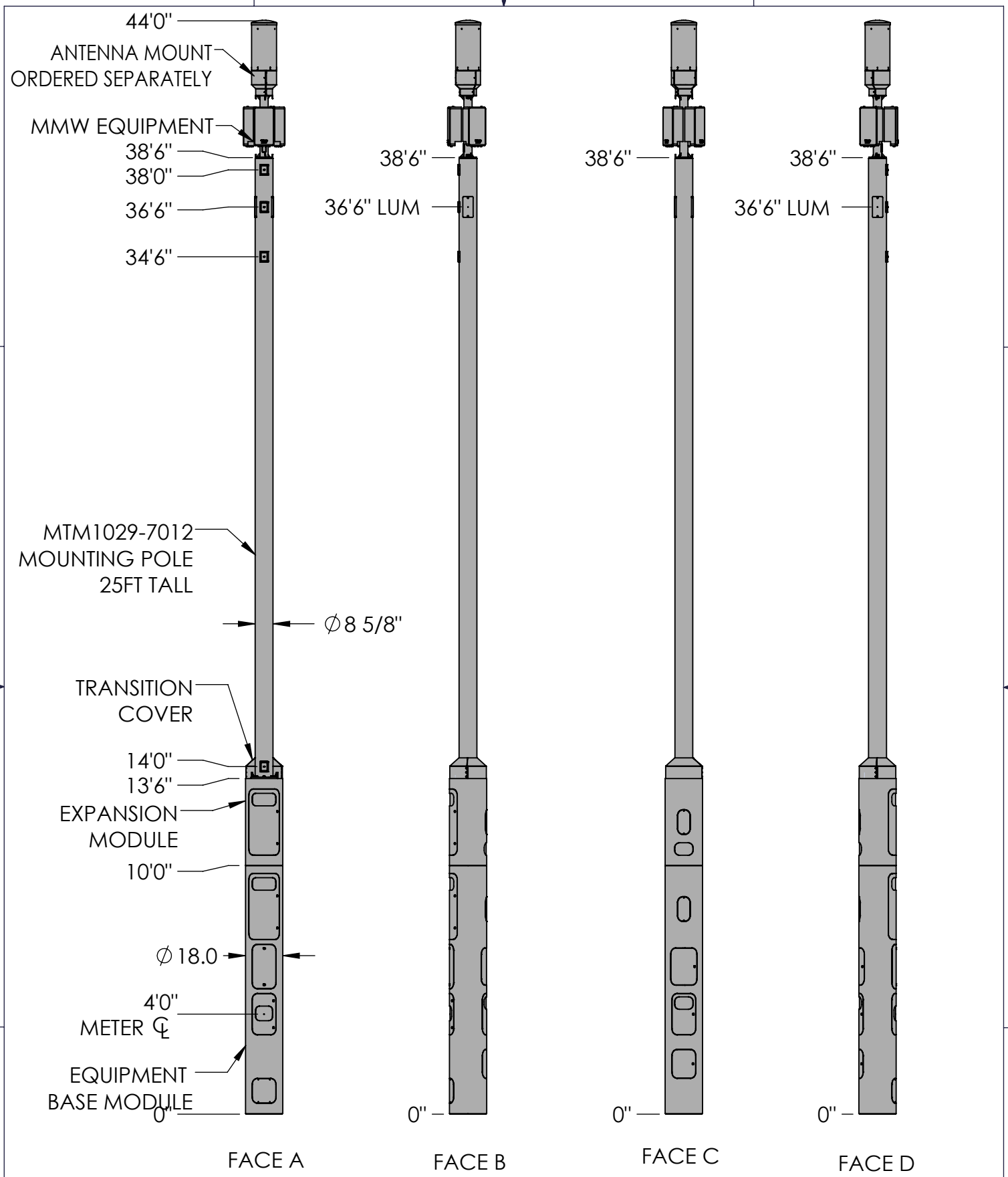

These drawings and specifications are the proprietary property of CommScope Inc. and may be used only for the specific purpose authorized in writing by CommScope Inc.

ALL DIMENSIONS ARE IN INCHES U.O.S.
TOLERANCES UNLESS OTHERWISE SPECIFIED:

.X = ±	.12	ANGLES	±2°
.XX = ±	.06	FRACTIONS	±1/32
.XXX= ±	.031		

REMOVE BURRS AND BREAK EDGES .005

DO NOT SCALE THIS PRINT

DRAWN BY: MJP	SHEET: 1 of 1	PART NUMBER: 760243184xx39xS
CHECKED BY:	SCALE:	DESCRIPTION: METRO CELL, 18 IN INTEGRATED POLE SOLUTION
DATE:	MATERIAL:	DRAWING TYPE:
REVISION: B	FINISH:	COMMSCOPE®
	WEIGHT:	

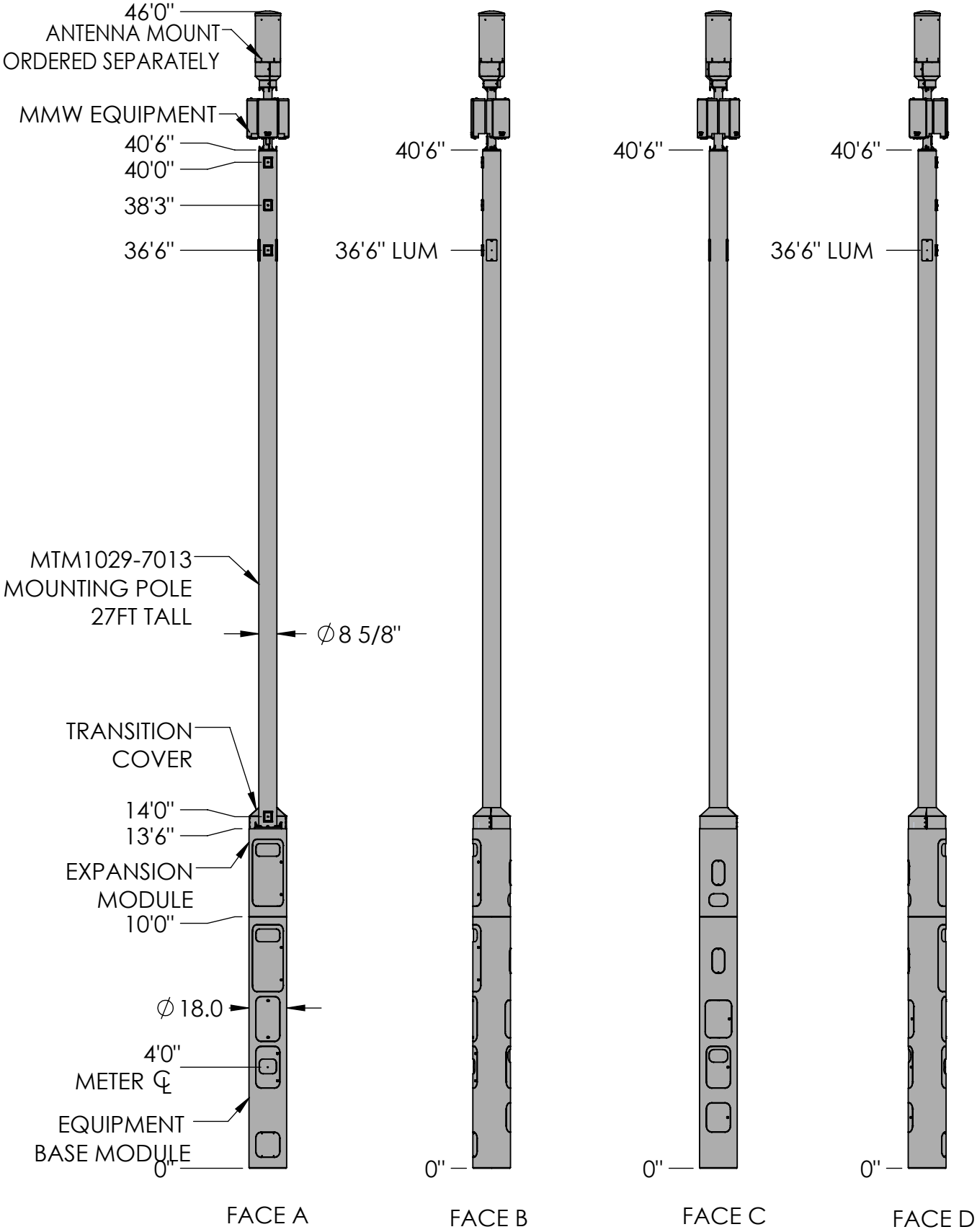

These drawings and specifications are the proprietary property of CommScope Inc. and may be used only for the specific purpose authorized in writing by CommScope Inc.

ALL DIMENSIONS ARE IN INCHES U.O.S.
TOLERANCES UNLESS OTHERWISE SPECIFIED:

.X = ±	.12	ANGLES	±2°
.XX = ±	.06	FRACTIONS	±1/32
.XXX= ±	.031		

REMOVE BURRS AND BREAK EDGES .005

DO NOT SCALE THIS PRINT

DRAWN BY: MJP	SHEET: 1 of 1	PART NUMBER: 760243184xx41xS
CHECKED BY:	SCALE:	DESCRIPTION: METRO CELL, 18 IN INTEGRATED POLE SOLUTION
DATE:	MATERIAL:	DRAWING TYPE:
REVISION: B	FINISH:	COMMSCOPE®
	WEIGHT:	

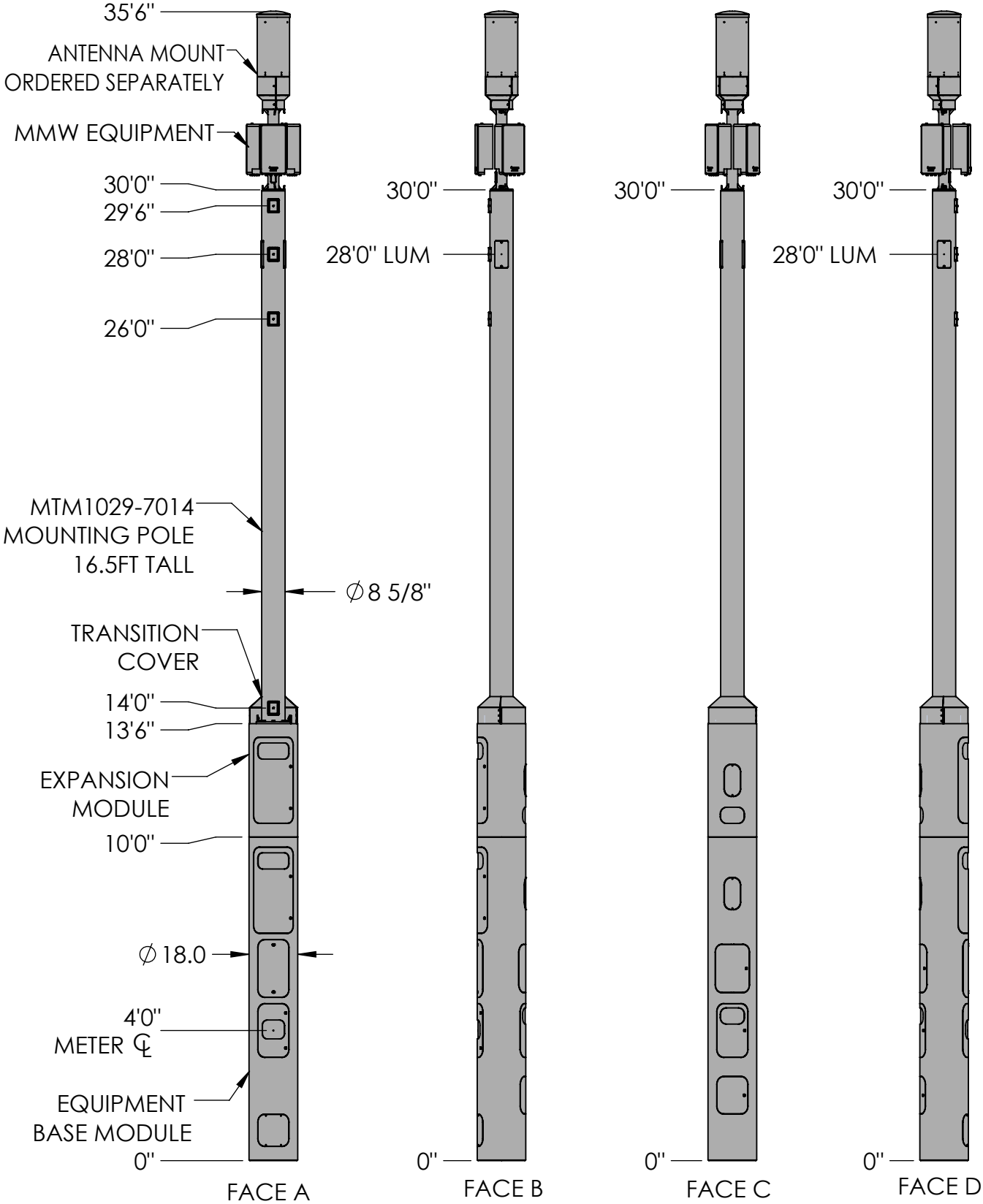

These drawings and specifications are the proprietary property of CommScope Inc. and may be used only for the specific purpose authorized in writing by CommScope Inc.

ALL DIMENSIONS ARE IN INCHES U.O.S.
TOLERANCES UNLESS OTHERWISE SPECIFIED:

.X = ±	.12	ANGLES	±2°
.XX = ±	.06	FRACTIONS	±1/32
.XXX= ±	.031		

REMOVE BURRS AND BREAK EDGES .005

DO NOT SCALE THIS PRINT

DRAWN BY: MJP	SHEET: 1 of 1	PART NUMBER: 760243184xx30xS
CHECKED BY:	SCALE:	DESCRIPTION: METRO CELL, 18 IN INTEGRATED POLE SOLUTION
DATE:	MATERIAL:	DRAWING TYPE:
REVISION: B	FINISH:	COMMSCOPE®
	WEIGHT:	

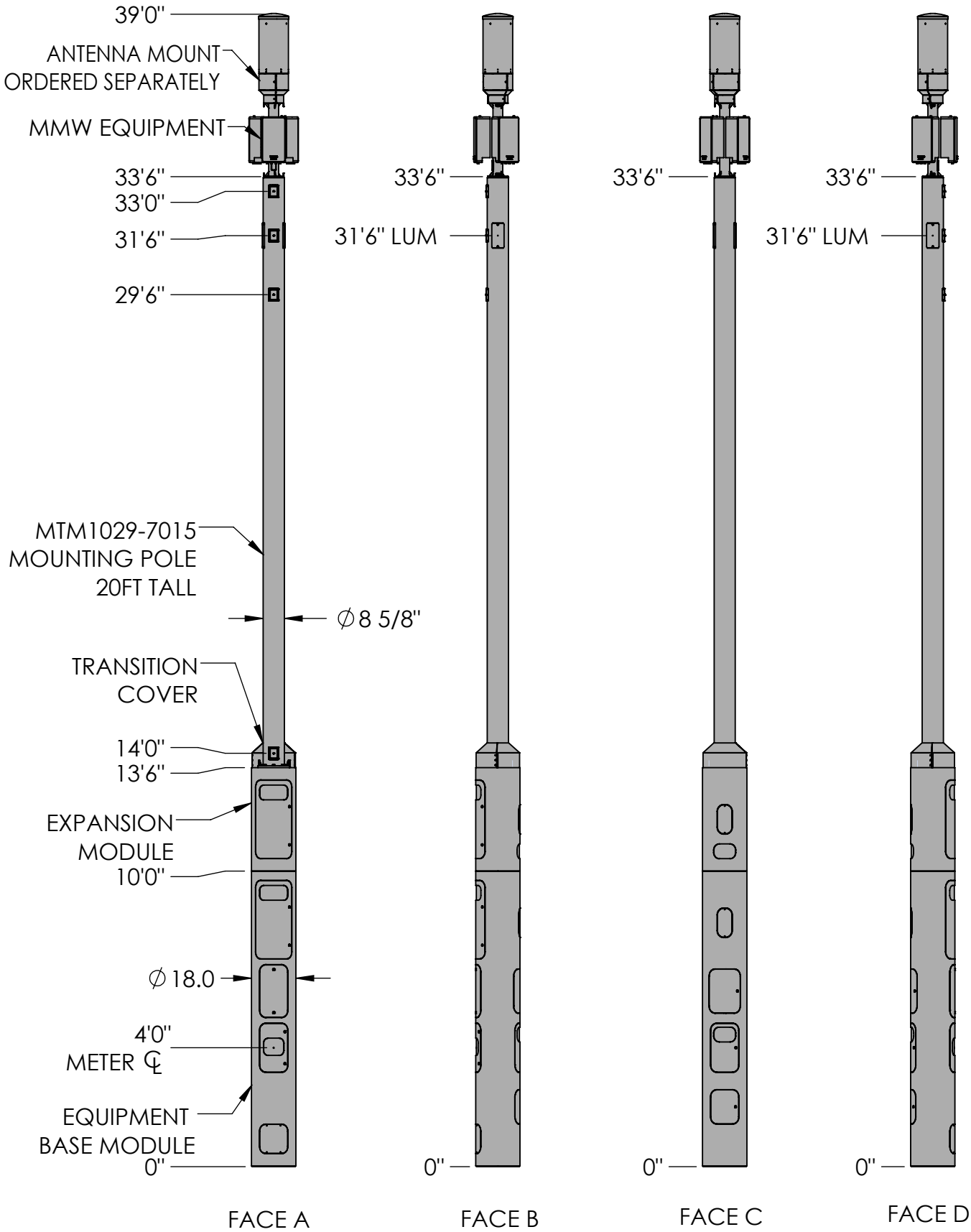

These drawings and specifications are the proprietary property of CommScope Inc. and may be used only for the specific purpose authorized in writing by CommScope Inc.

ALL DIMENSIONS ARE IN INCHES U.O.S.
TOLERANCES UNLESS OTHERWISE SPECIFIED:

.X = ±	.12	ANGLES	±2°
.XX = ±	.06	FRACTIONS	±1/32
.XXX= ±	.031		

REMOVE BURRS AND BREAK EDGES .005

DO NOT SCALE THIS PRINT

DRAWN BY: MJP	SHEET: 1 of 1	PART NUMBER: 760243184xx34xS
CHECKED BY:	SCALE:	DESCRIPTION: METRO CELL, 18 IN INTEGRATED POLE SOLUTION
DATE:	MATERIAL:	DRAWING TYPE:
REVISION: B	FINISH:	COMMSCOPE®
	WEIGHT:	

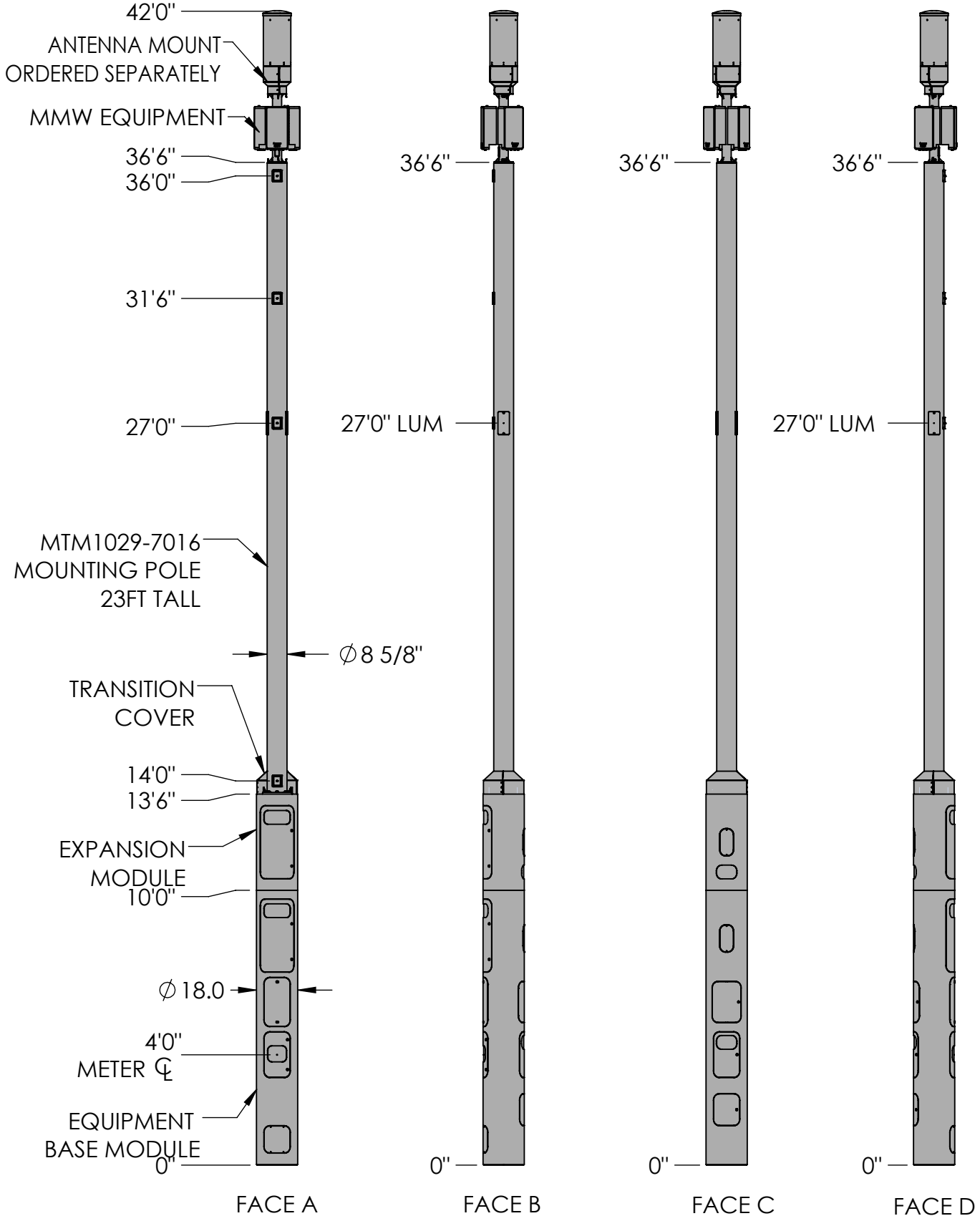

These drawings and specifications are the proprietary property of CommScope Inc. and may be used only for the specific purpose authorized in writing by CommScope Inc.

ALL DIMENSIONS ARE IN INCHES U.O.S.
TOLERANCES UNLESS OTHERWISE SPECIFIED:

.X = ±	.12	ANGLES	±2°
.XX = ±	.06	FRACTIONS	±1/32
.XXX= ±	.031		

REMOVE BURRS AND BREAK EDGES .005

DO NOT SCALE THIS PRINT

DRAWN BY: MJP	SHEET: 1 of 1	PART NUMBER: 760243184xx37xS
CHECKED BY:	SCALE:	DESCRIPTION: METRO CELL, 18 IN INTEGRATED POLE SOLUTION
DATE:	MATERIAL:	DRAWING TYPE:
REVISION: B	FINISH:	COMMSCOPE®
	WEIGHT:	

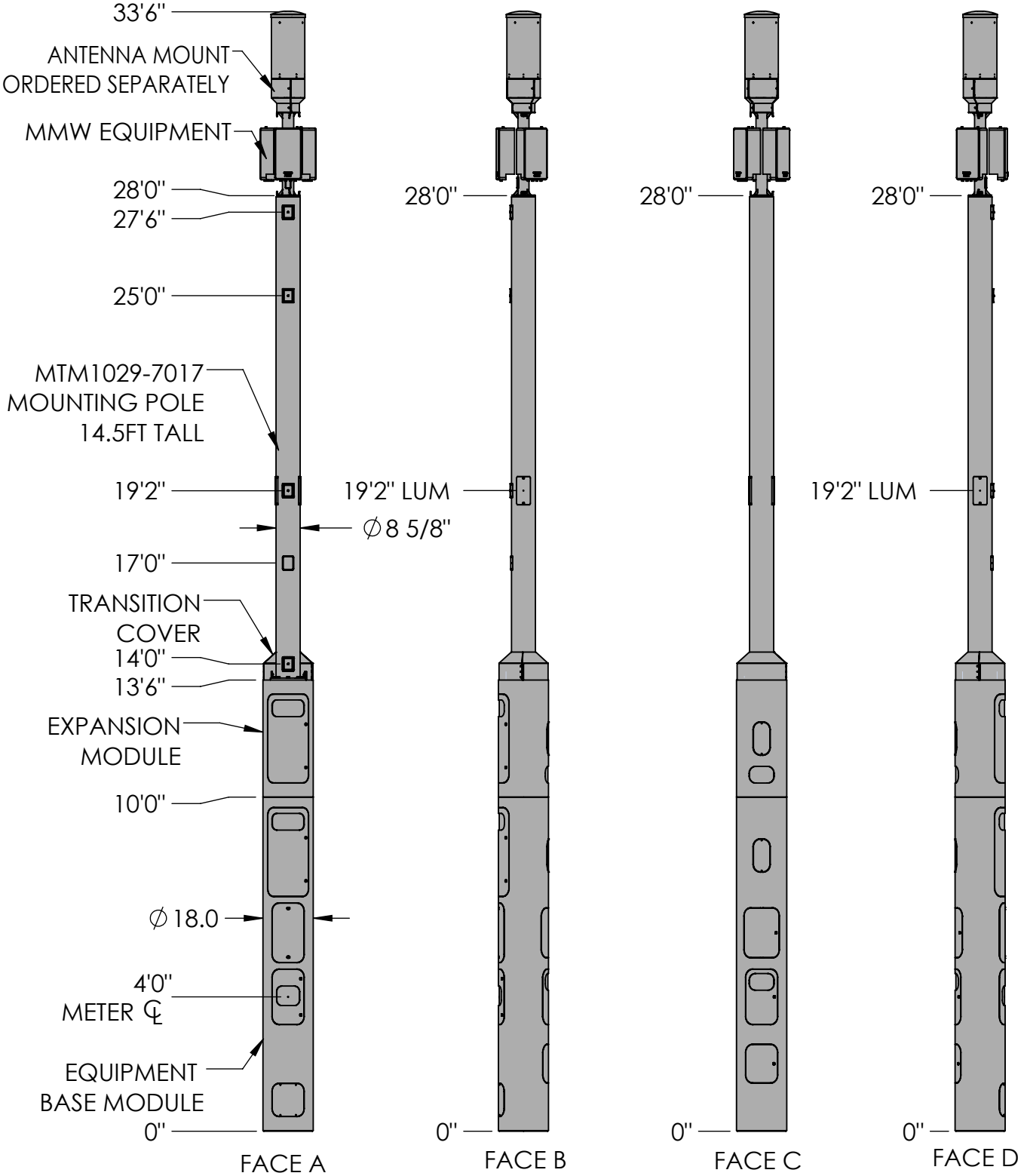

These drawings and specifications are the proprietary property of CommScope Inc. and may be used only for the specific purpose authorized in writing by CommScope Inc.

ALL DIMENSIONS ARE IN INCHES U.O.S.
TOLERANCES UNLESS OTHERWISE SPECIFIED:

.X = ±	.12	ANGLES	±2°
.XX = ±	.06	FRACTIONS	±1/32
.XXX= ±	.031		

REMOVE BURRS AND BREAK EDGES .005

DO NOT SCALE THIS PRINT

DRAWN BY: MJP	SHEET: 1 of 1	PART NUMBER: 760243184xx28xS
CHECKED BY:	SCALE:	DESCRIPTION: METRO CELL, 18 IN INTEGRATED POLE SOLUTION
DATE:	MATERIAL:	DRAWING TYPE:
REVISION: B	FINISH:	COMMSCOPE®
	WEIGHT:	

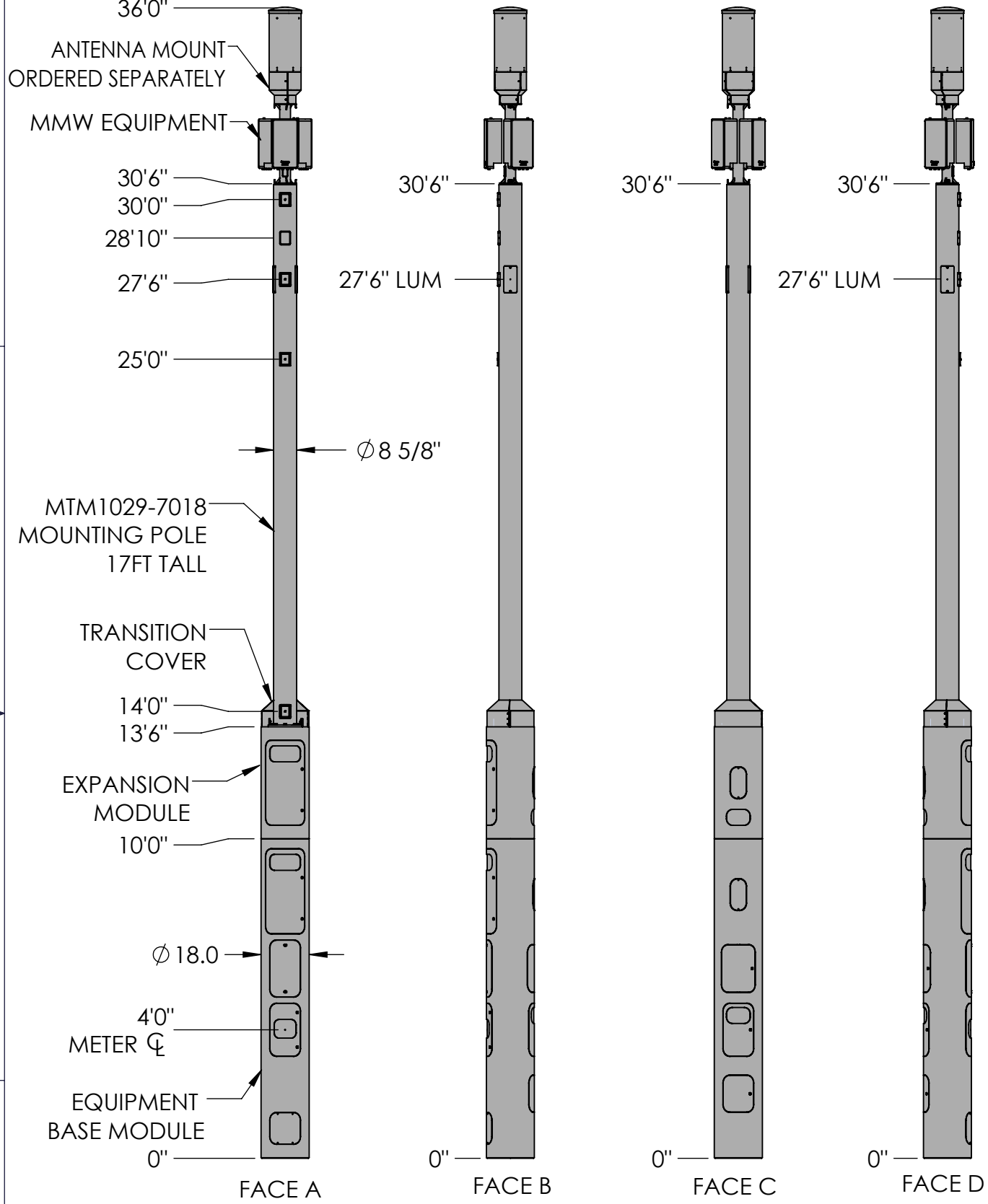

These drawings and specifications are the proprietary property of CommScope Inc. and may be used only for the specific purpose authorized in writing by CommScope Inc.

ALL DIMENSIONS ARE IN INCHES U.O.S.
TOLERANCES UNLESS OTHERWISE SPECIFIED:

.X = ±	.12	ANGLES	±2°
.XX = ±	.06	FRACTIONS	±1/32
.XXX= ±	.031		

REMOVE BURRS AND BREAK EDGES .005

DO NOT SCALE THIS PRINT

DRAWN BY: MJP	SHEET: 1 of 1	PART NUMBER: 760243184xx31xS
CHECKED BY:	SCALE:	DESCRIPTION: METRO CELL, 18 IN INTEGRATED POLE SOLUTION
DATE:	MATERIAL:	DRAWING TYPE:
REVISION: B	FINISH:	COMMSCOPE®
	WEIGHT:	

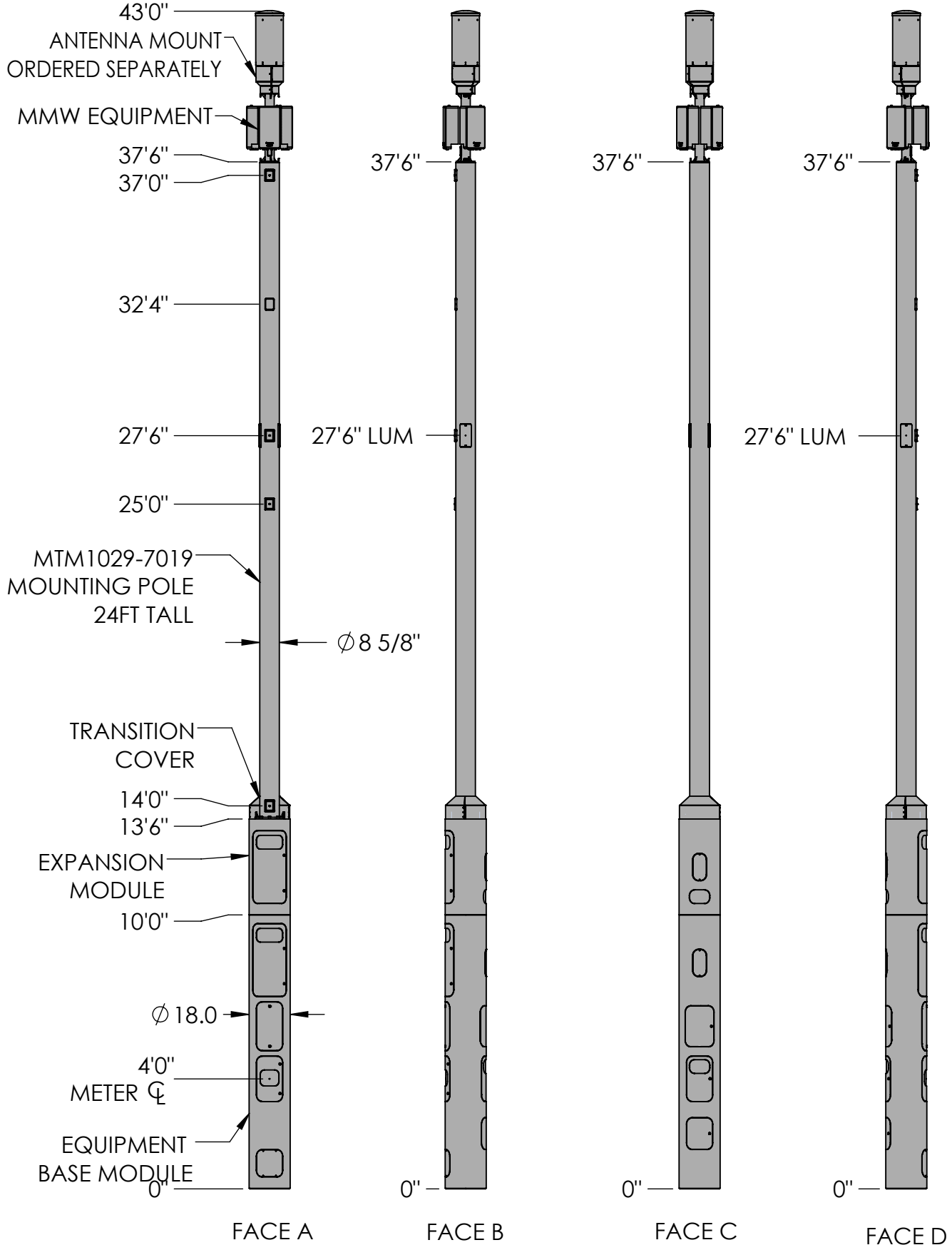

These drawings and specifications are the proprietary property of CommScope Inc. and may be used only for the specific purpose authorized in writing by CommScope Inc.

ALL DIMENSIONS ARE IN INCHES U.O.S.
TOLERANCES UNLESS OTHERWISE SPECIFIED:

.X = ±	.12	ANGLES	±2°
.XX = ±	.06	FRACTIONS	±1/32
.XXX= ±	.031		

REMOVE BURRS AND BREAK EDGES .005

DO NOT SCALE THIS PRINT

DRAWN BY: MJP	SHEET: 1 of 1	PART NUMBER: 760243184xx38xS
CHECKED BY:	SCALE:	DESCRIPTION: METRO CELL, 18 IN INTEGRATED POLE SOLUTION
DATE:	MATERIAL:	DRAWING TYPE:
REVISION: B	FINISH:	COMMSCOPE®
	WEIGHT:	

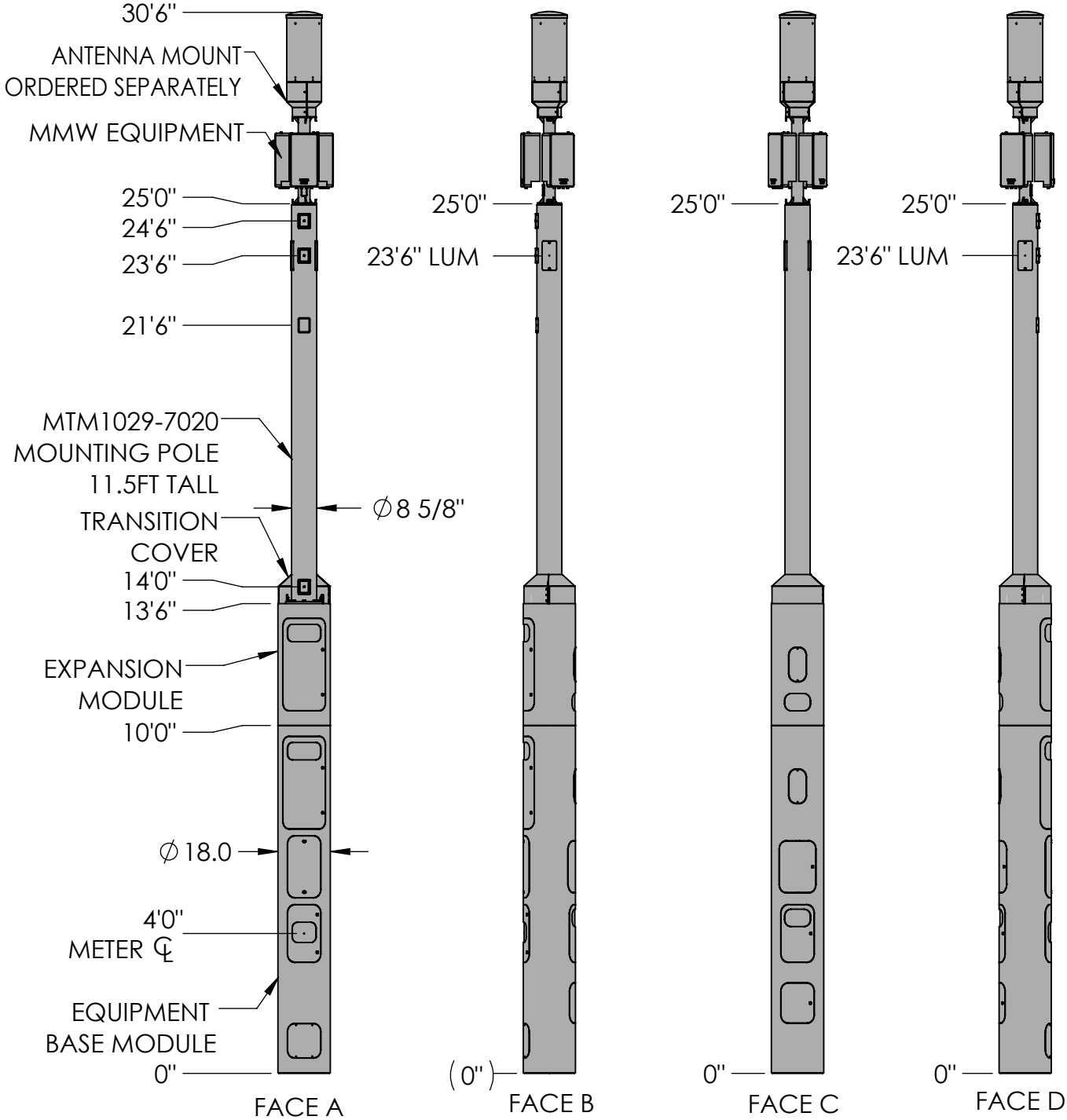

These drawings and specifications are the proprietary property of CommScope Inc. and may be used only for the specific purpose authorized in writing by CommScope Inc.

ALL DIMENSIONS ARE IN INCHES U.O.S.
TOLERANCES UNLESS OTHERWISE SPECIFIED:

.X = ±	.12	ANGLES	±2°
.XX = ±	.06	FRACTIONS	±1/32
.XXX= ±	.031		

REMOVE BURRS AND BREAK EDGES .005

DO NOT SCALE THIS PRINT

DRAWN BY: MJP	SHEET: 1 of 1	PART NUMBER: 760243184xx25xS
CHECKED BY:	SCALE:	DESCRIPTION: METRO CELL, 18 IN INTEGRATED POLE SOLUTION
DATE:	MATERIAL:	DRAWING TYPE:
REVISION: B	FINISH:	COMMSCOPE®
	WEIGHT:	

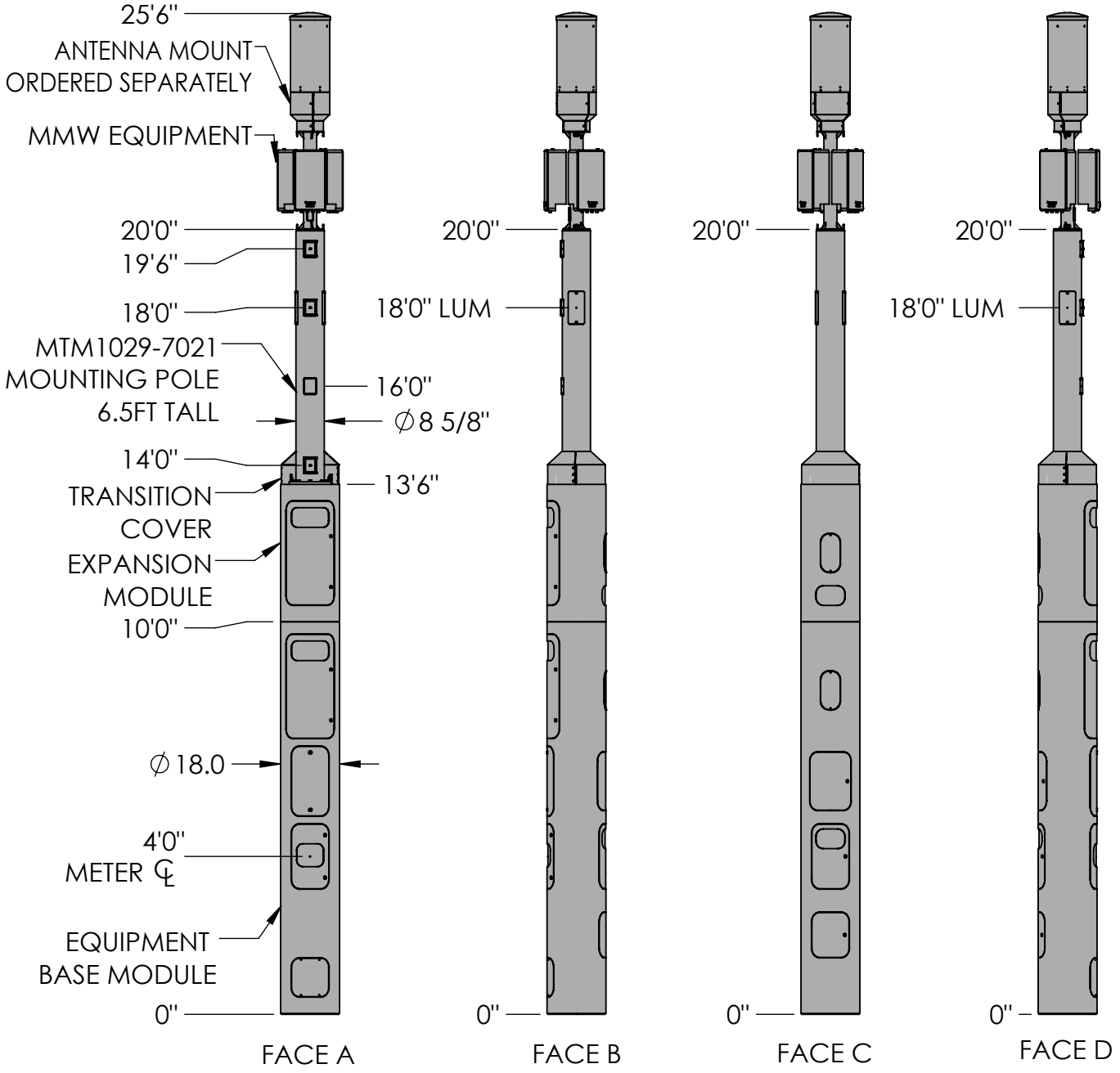

These drawings and specifications are the proprietary property of CommScope Inc. and may be used only for the specific purpose authorized in writing by CommScope Inc.

ALL DIMENSIONS ARE IN INCHES U.O.S.
TOLERANCES UNLESS OTHERWISE SPECIFIED:

.X = ±	.12	ANGLES	±2°
.XX = ±	.06	FRACTIONS	±1/32
.XXX= ±	.031		

REMOVE BURRS AND BREAK EDGES .005

DO NOT SCALE THIS PRINT

DRAWN BY: MJP	SHEET: 1 of 1	PART NUMBER: 760243184xx20xS
CHECKED BY:	SCALE:	DESCRIPTION: METRO CELL, 18 IN INTEGRATED POLE SOLUTION
DATE:	MATERIAL:	DRAWING TYPE:
REVISION: B	FINISH:	COMMSCOPE®
	WEIGHT:	

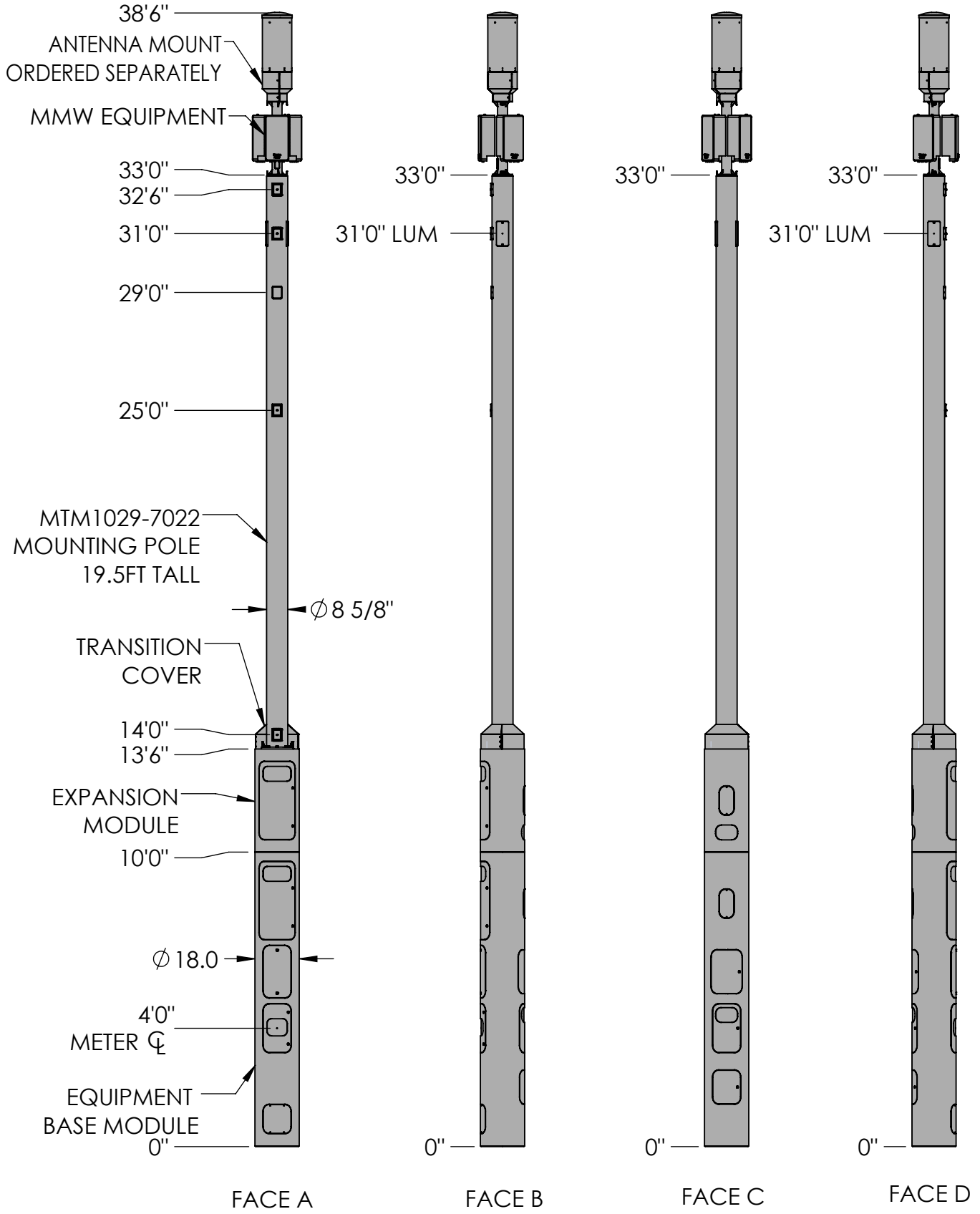

These drawings and specifications are the proprietary property of CommScope Inc. and may be used only for the specific purpose authorized in writing by CommScope Inc.

ALL DIMENSIONS ARE IN INCHES U.O.S.
TOLERANCES UNLESS OTHERWISE SPECIFIED:

.X = ±	.12	ANGLES	±2°
.XX = ±	.06	FRACTIONS	±1/32
.XXX= ±	.031		

REMOVE BURRS AND BREAK EDGES .005

DO NOT SCALE THIS PRINT

DRAWN BY: MJP	SHEET: 1 of 1	PART NUMBER: 760243184xx33xS
CHECKED BY:	SCALE:	DESCRIPTION: METRO CELL, 18 IN INTEGRATED POLE SOLUTION
DATE:	MATERIAL:	DRAWING TYPE:
REVISION: B	FINISH:	COMMSCOPE®
	WEIGHT:	

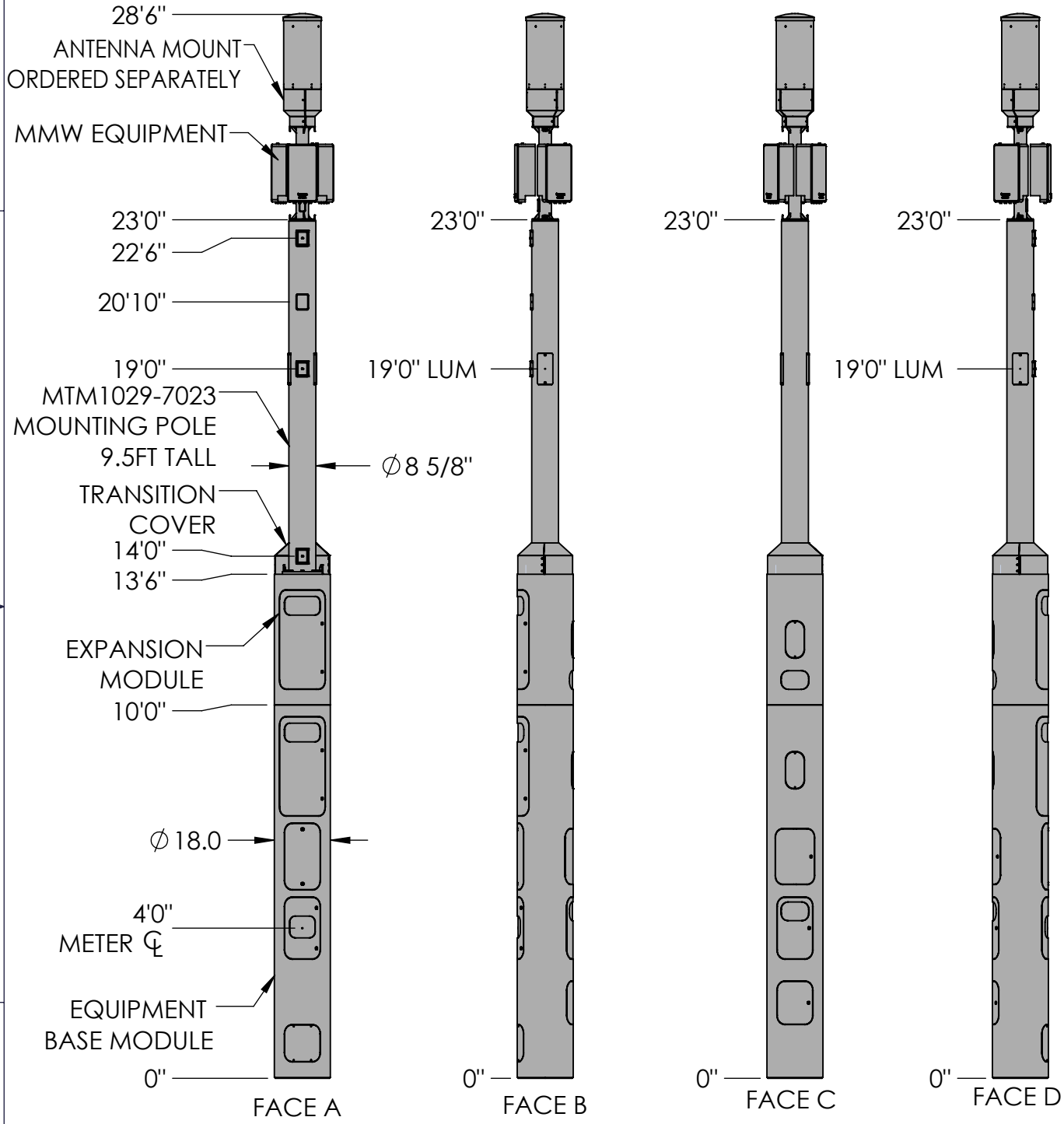

These drawings and specifications are the proprietary property of CommScope Inc. and may be used only for the specific purpose authorized in writing by CommScope Inc.

ALL DIMENSIONS ARE IN INCHES U.O.S.
TOLERANCES UNLESS OTHERWISE SPECIFIED:

.X = ±	.12	ANGLES	±2°
.XX = ±	.06	FRACTIONS	±1/32
.XXX= ±	.031		

REMOVE BURRS AND BREAK EDGES .005

DO NOT SCALE THIS PRINT

DRAWN BY: MJP	SHEET: 1 of 1	PART NUMBER: 760243184xx23xS
CHECKED BY:	SCALE:	DESCRIPTION: METRO CELL, 18 IN INTEGRATED POLE SOLUTION
DATE:	MATERIAL:	DRAWING TYPE:
REVISION: B	FINISH:	COMMSCOPE®
	WEIGHT:	

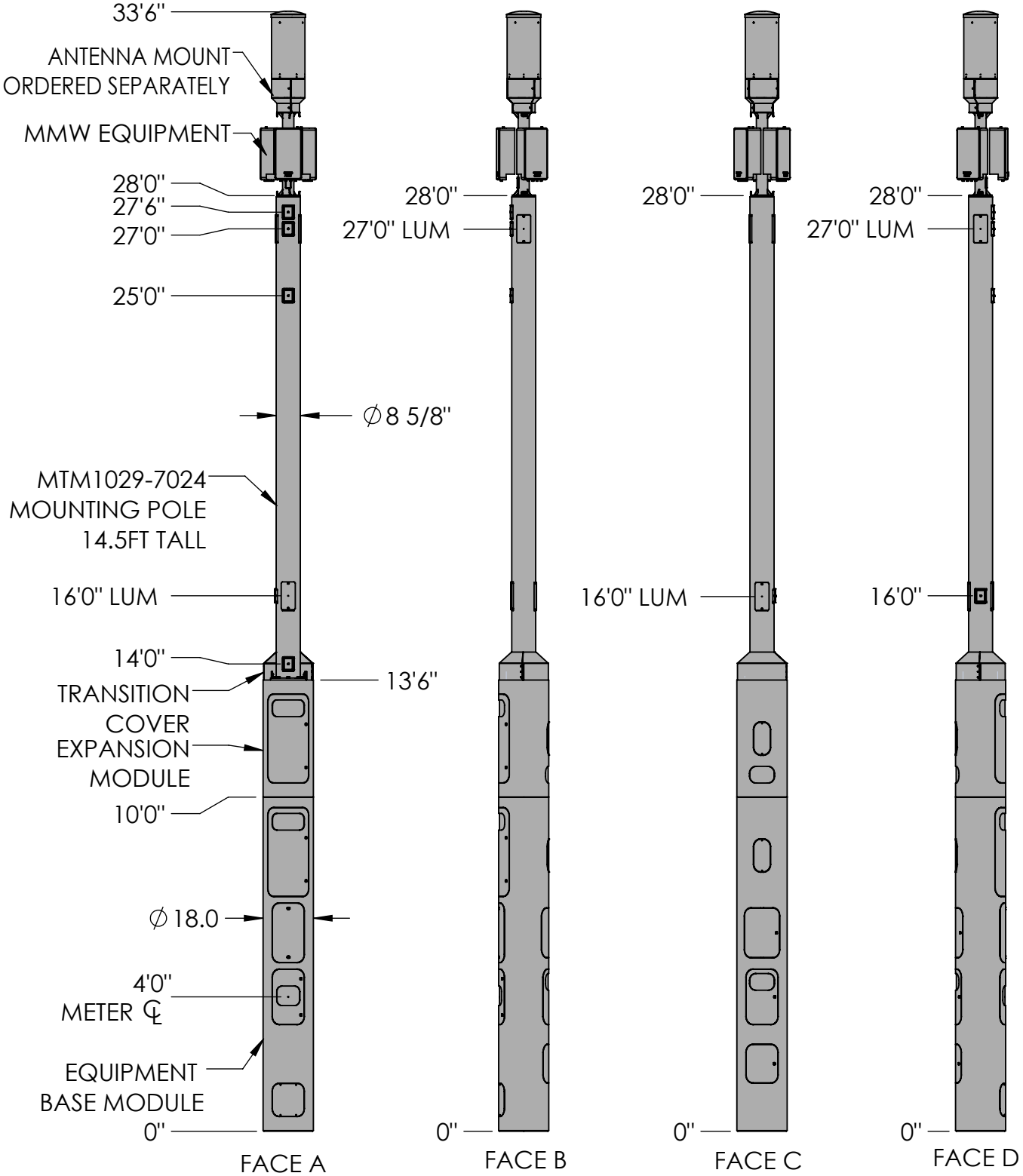

These drawings and specifications are the proprietary property of CommScope Inc. and may be used only for the specific purpose authorized in writing by CommScope Inc.

ALL DIMENSIONS ARE IN INCHES U.O.S.
TOLERANCES UNLESS OTHERWISE SPECIFIED:

.X = ±	.12	ANGLES	±2°
.XX = ±	.06	FRACTIONS	±1/32
.XXX= ±	.031		

REMOVE BURRS AND BREAK EDGES .005

DO NOT SCALE THIS PRINT

DRAWN BY: MJP	SHEET: 1 of 1	PART NUMBER: 760243184xx28xS
CHECKED BY:	SCALE:	DESCRIPTION: METRO CELL, 18 IN INTEGRATED POLE SOLUTION
DATE:	MATERIAL:	DRAWING TYPE:
REVISION: B	FINISH:	COMMSCOPE®
	WEIGHT:	