REVISIONS			
REV.	DESCRIPTION	BY	DATE
B	UPDATED FORMAT	MJP	09/23/26

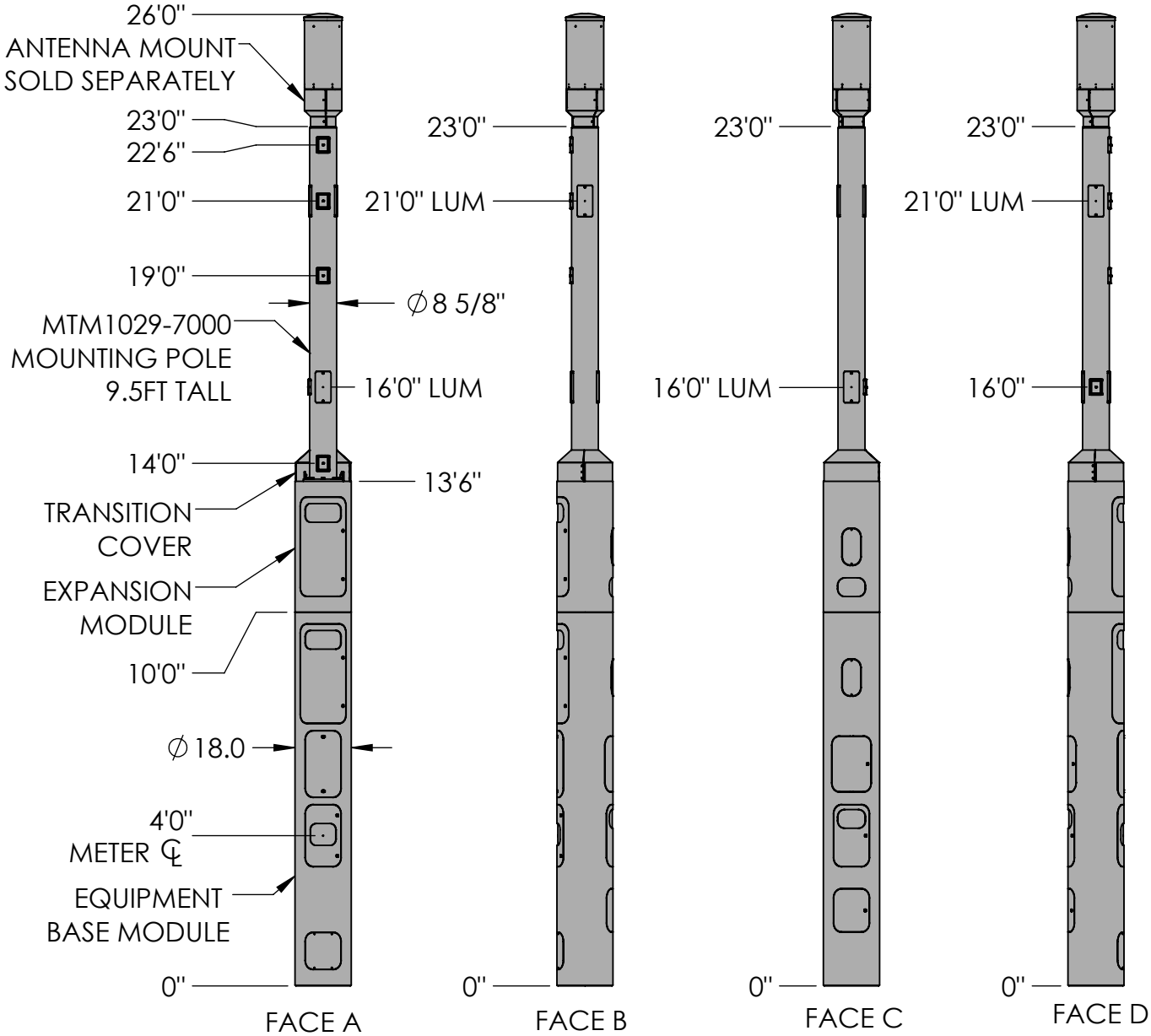

These drawings and specifications are the proprietary property of CommScope Inc. and may be used only for the specific purpose authorized in writing by CommScope Inc.

ALL DIMENSIONS ARE IN INCHES U.O.S.
TOLERANCES UNLESS OTHERWISE SPECIFIED:

.X = ±	.12	ANGLES	±2°
.XX = ±	.06	FRACTIONS	±1/32
.XXX= ±	.031		

REMOVE BURRS AND BREAK EDGES .005

DO NOT SCALE THIS PRINT

DRAWN BY: MJP	SHEET: 1 of 1	PART NUMBER: 760243184xx23x
CHECKED BY:	SCALE:	DESCRIPTION: METRO CELL, 18 IN INTEGRATED POLE SOLUTION
DATE:	MATERIAL:	DRAWING TYPE:
REVISION: B	FINISH:	ANDREW an Amphenol company
	WEIGHT:	

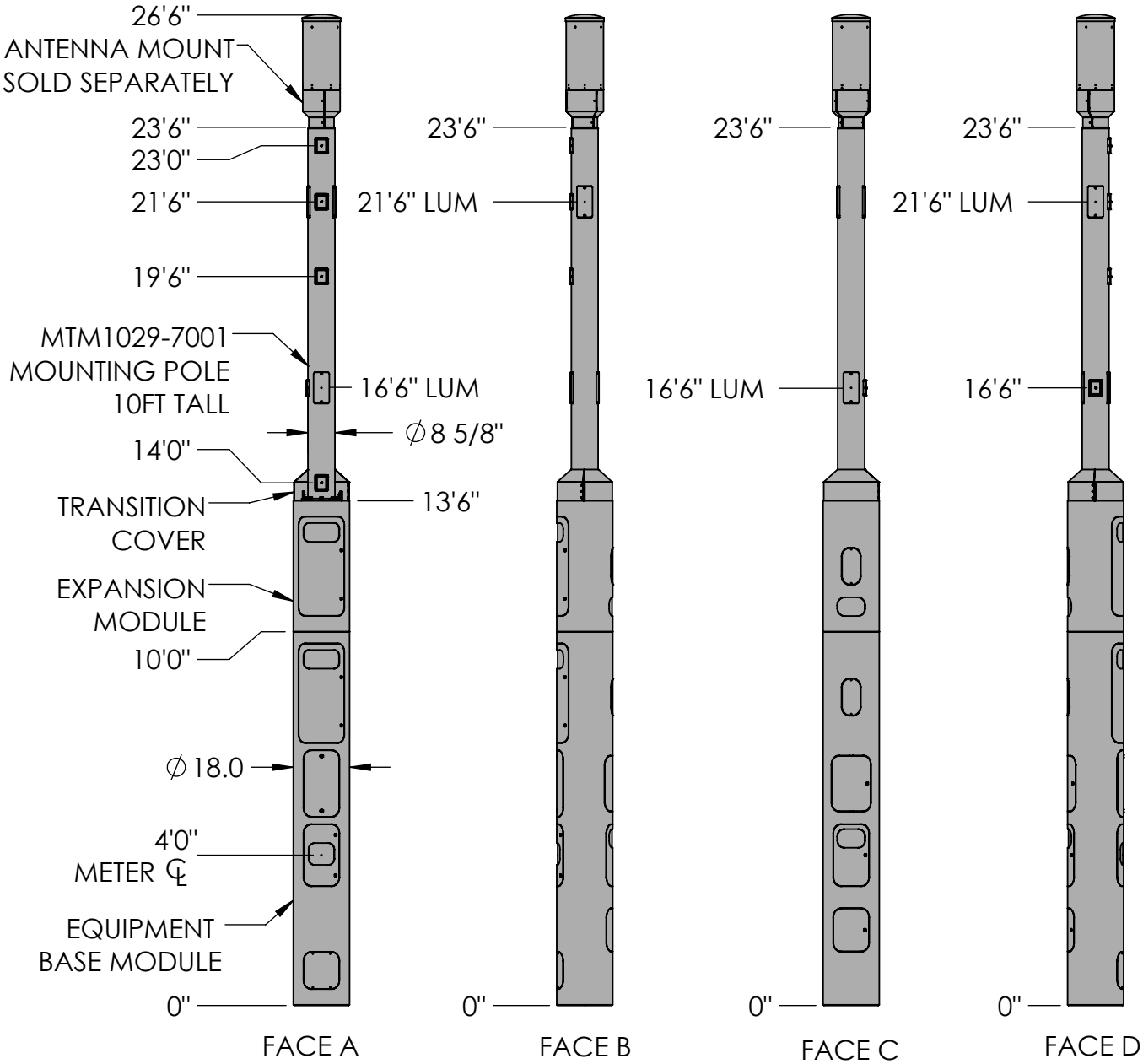

These drawings and specifications are the proprietary property of CommScope Inc. and may be used only for the specific purpose authorized in writing by CommScope Inc.

ALL DIMENSIONS ARE IN INCHES U.O.S.
TOLERANCES UNLESS OTHERWISE SPECIFIED:

.X = ±	.12	ANGLES	±2°
.XX = ±	.06	FRACTIONS	±1/32
.XXX= ±	.031		

REMOVE BURRS AND BREAK EDGES .005

DO NOT SCALE THIS PRINT

DRAWN BY: MJP	SHEET: 1 of 1	PART NUMBER: 760243184xx24x
CHECKED BY:	SCALE:	DESCRIPTION: METRO CELL, 18 IN INTEGRATED POLE SOLUTION
DATE:	MATERIAL:	DRAWING TYPE:
REVISION: B	FINISH:	ANDREW. an Amphenol company
	WEIGHT:	

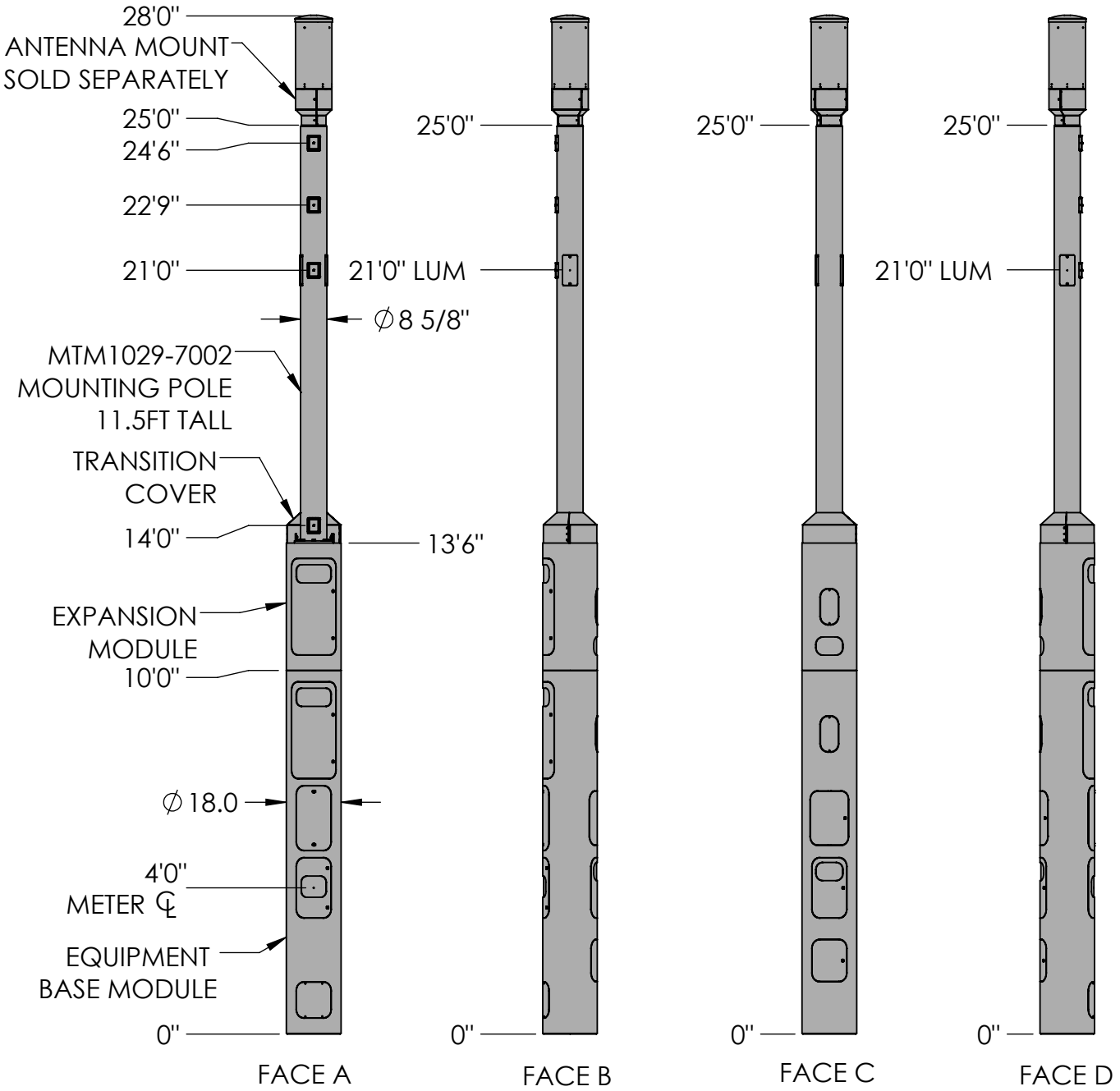

These drawings and specifications are the proprietary property of CommScope Inc. and may be used only for the specific purpose authorized in writing by CommScope Inc.

ALL DIMENSIONS ARE IN INCHES U.O.S.
TOLERANCES UNLESS OTHERWISE SPECIFIED:

.X = ±	.12	ANGLES	±2°
.XX = ±	.06	FRACTIONS	±1/32
.XXX= ±	.031		

REMOVE BURRS AND BREAK EDGES .005

DO NOT SCALE THIS PRINT

DRAWN BY: MJP	SHEET: 1 of 1	PART NUMBER: 760243184xx25x
CHECKED BY:	SCALE:	DESCRIPTION: METRO CELL, 18 IN INTEGRATED POLE SOLUTION
DATE:	MATERIAL:	DRAWING TYPE:
REVISION: B	FINISH:	ANDREW an Amphenol company
	WEIGHT:	

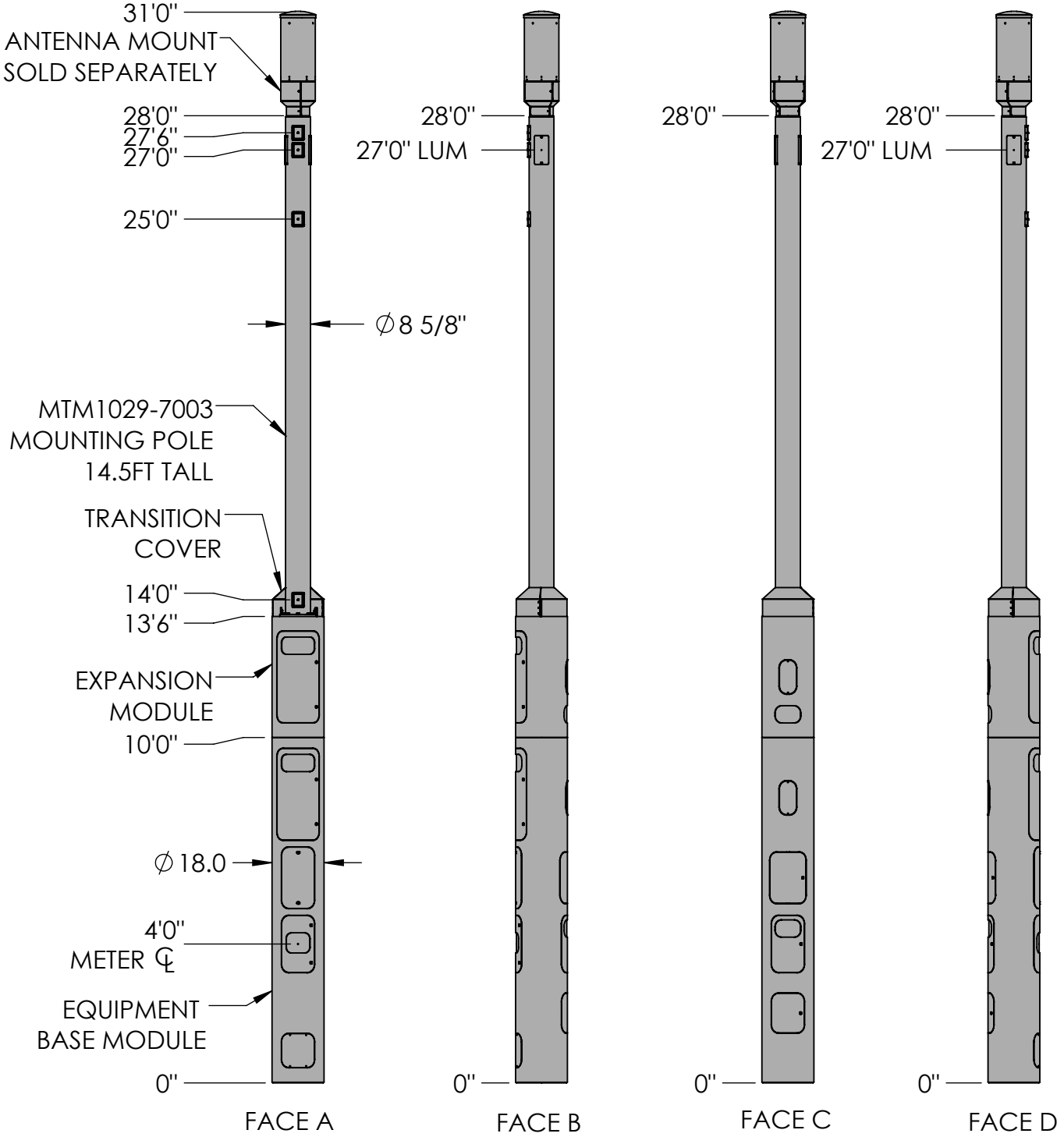

These drawings and specifications are the proprietary property of CommScope Inc. and may be used only for the specific purpose authorized in writing by CommScope Inc.

ALL DIMENSIONS ARE IN INCHES U.O.S.
TOLERANCES UNLESS OTHERWISE SPECIFIED:

.X = ±	.12	ANGLES	±2°
.XX = ±	.06	FRACTIONS	±1/32
.XXX= ±	.031		

REMOVE BURRS AND BREAK EDGES .005

DO NOT SCALE THIS PRINT

DRAWN BY: MJP	SHEET: 1 of 1	PART NUMBER: 760243184xx28x
CHECKED BY:	SCALE:	DESCRIPTION: METRO CELL, 18 IN INTEGRATED POLE SOLUTION
DATE:	MATERIAL:	DRAWING TYPE:
REVISION: B	FINISH:	ANDREW an Amphenol company
	WEIGHT:	

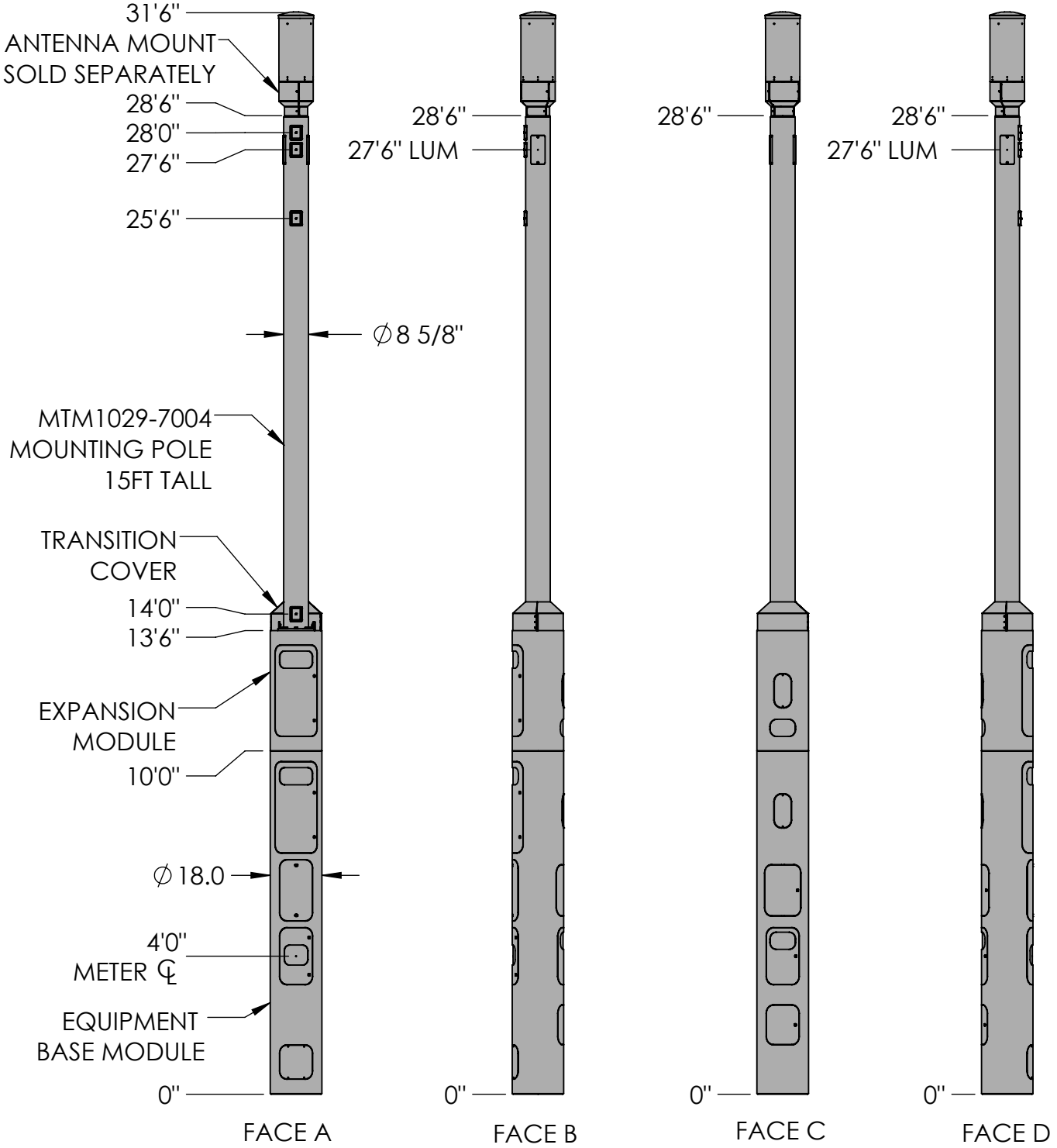

These drawings and specifications are the proprietary property of CommScope Inc. and may be used only for the specific purpose authorized in writing by CommScope Inc.

ALL DIMENSIONS ARE IN INCHES U.O.S.
TOLERANCES UNLESS OTHERWISE SPECIFIED:

.X = ±	.12	ANGLES	±2°
.XX = ±	.06	FRACTIONS	±1/32
.XXX= ±	.031		

REMOVE BURRS AND BREAK EDGES .005

DO NOT SCALE THIS PRINT

DRAWN BY: MJP	SHEET: 1 of 1	PART NUMBER: 760243184xx29x
CHECKED BY:	SCALE:	DESCRIPTION: METRO CELL, 18 IN INTEGRATED POLE SOLUTION
DATE:	MATERIAL:	DRAWING TYPE:
REVISION: B	FINISH:	ANDREW an Amphenol company
	WEIGHT:	

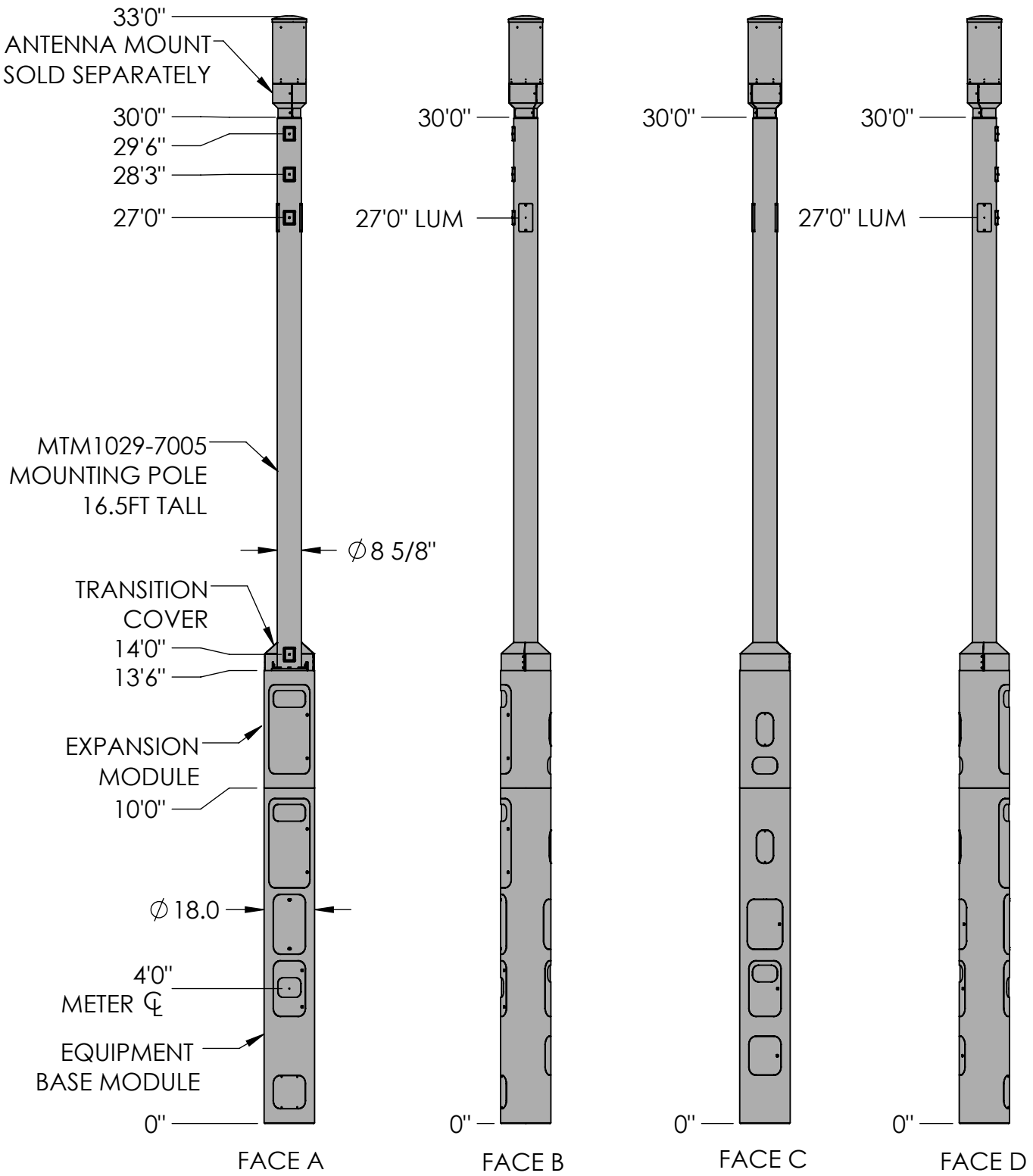

These drawings and specifications are the proprietary property of CommScope Inc. and may be used only for the specific purpose authorized in writing by CommScope Inc.

ALL DIMENSIONS ARE IN INCHES U.O.S.
TOLERANCES UNLESS OTHERWISE SPECIFIED:

.X = ±	.12	ANGLES	±2°
.XX = ±	.06	FRACTIONS	±1/32
.XXX= ±	.031		

REMOVE BURRS AND BREAK EDGES .005

DO NOT SCALE THIS PRINT

DRAWN BY: MJP	SHEET: 1 of 1	PART NUMBER: 760243184xx30x
CHECKED BY:	SCALE:	DESCRIPTION: METRO CELL, 18 IN INTEGRATED POLE SOLUTION
DATE:	MATERIAL:	DRAWING TYPE:
REVISION: B	FINISH:	ANDREW an Amphenol company
	WEIGHT:	

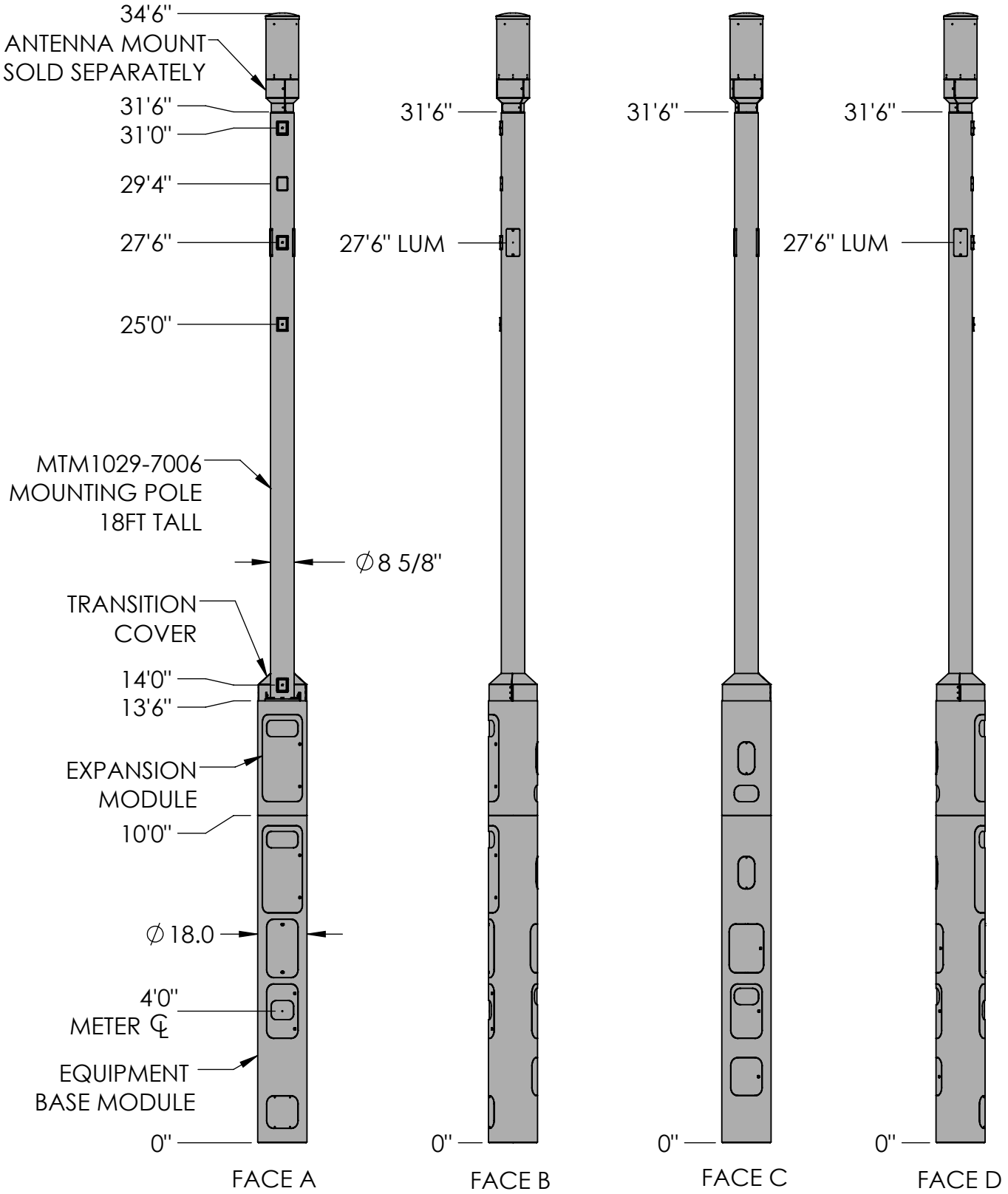

These drawings and specifications are the proprietary property of CommScope Inc. and may be used only for the specific purpose authorized in writing by CommScope Inc.

ALL DIMENSIONS ARE IN INCHES U.O.S.
TOLERANCES UNLESS OTHERWISE SPECIFIED:

.X = ±	.12	ANGLES	±2°
.XX = ±	.06	FRACTIONS	±1/32
.XXX= ±	.031		

REMOVE BURRS AND BREAK EDGES .005

DO NOT SCALE THIS PRINT

DRAWN BY: MJP	SHEET: 1 of 1	PART NUMBER: 760243184xx32x	
CHECKED BY:	SCALE:	DESCRIPTION: METRO CELL, 18 IN INTEGRATED POLE SOLUTION	
DATE:	MATERIAL:	DRAWING TYPE:	
REVISION: B	FINISH:	ANDREW an Amphenol company	
	WEIGHT:		

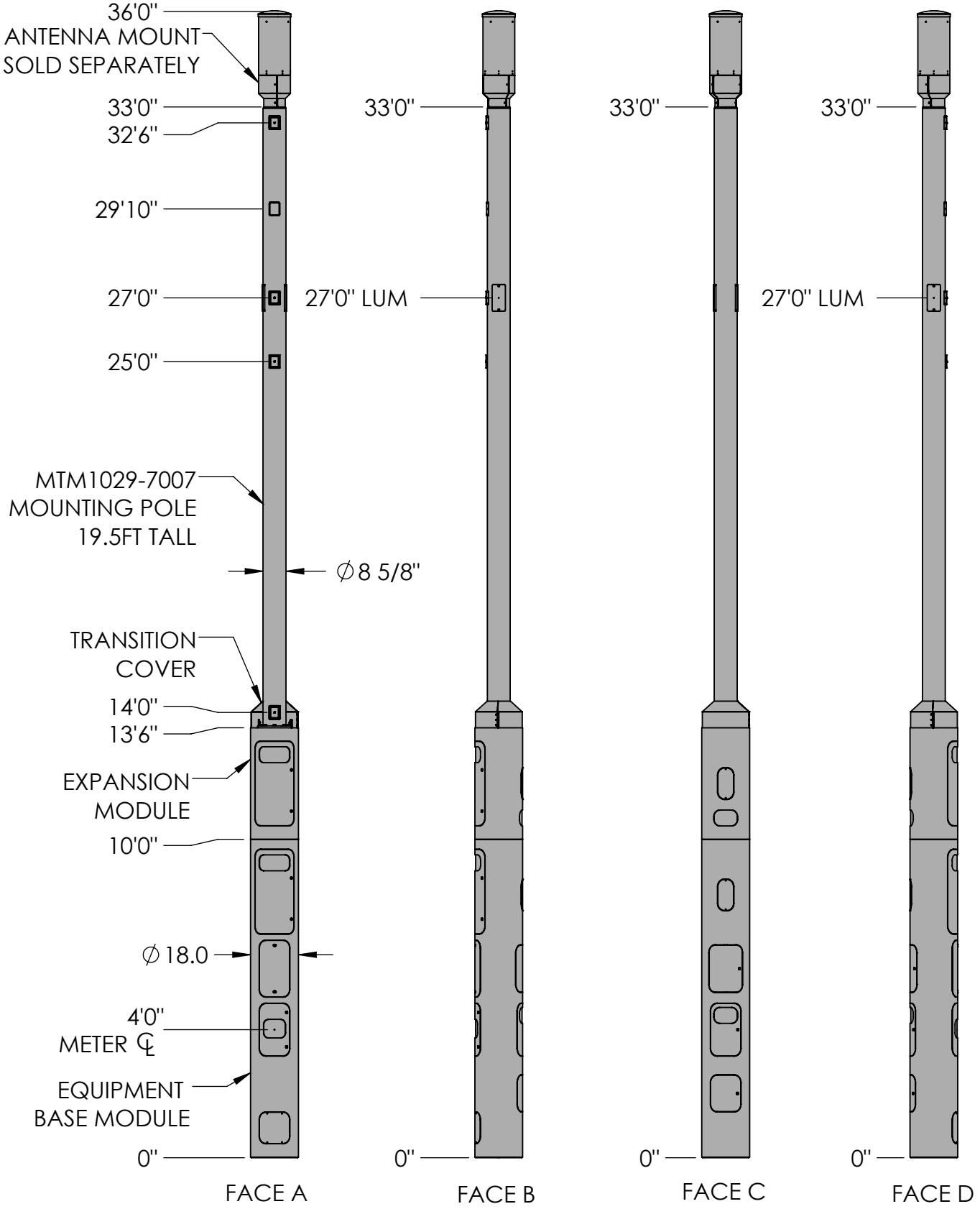

These drawings and specifications are the proprietary property of CommScope Inc. and may be used only for the specific purpose authorized in writing by CommScope Inc.

ALL DIMENSIONS ARE IN INCHES U.O.S.
TOLERANCES UNLESS OTHERWISE SPECIFIED:

.X = ±	.12	ANGLES	±2°
.XX = ±	.06	FRACTIONS	±1/32
.XXX= ±	.031		

REMOVE BURRS AND BREAK EDGES .005

DO NOT SCALE THIS PRINT

DRAWN BY: MJP	SHEET: 1 of 1	PART NUMBER: 760243184xx33x
CHECKED BY:	SCALE:	DESCRIPTION: METRO CELL, 18 IN INTEGRATED POLE SOLUTION
DATE:	MATERIAL:	DRAWING TYPE:
REVISION: B	FINISH:	ANDREW an Amphenol company
	WEIGHT:	

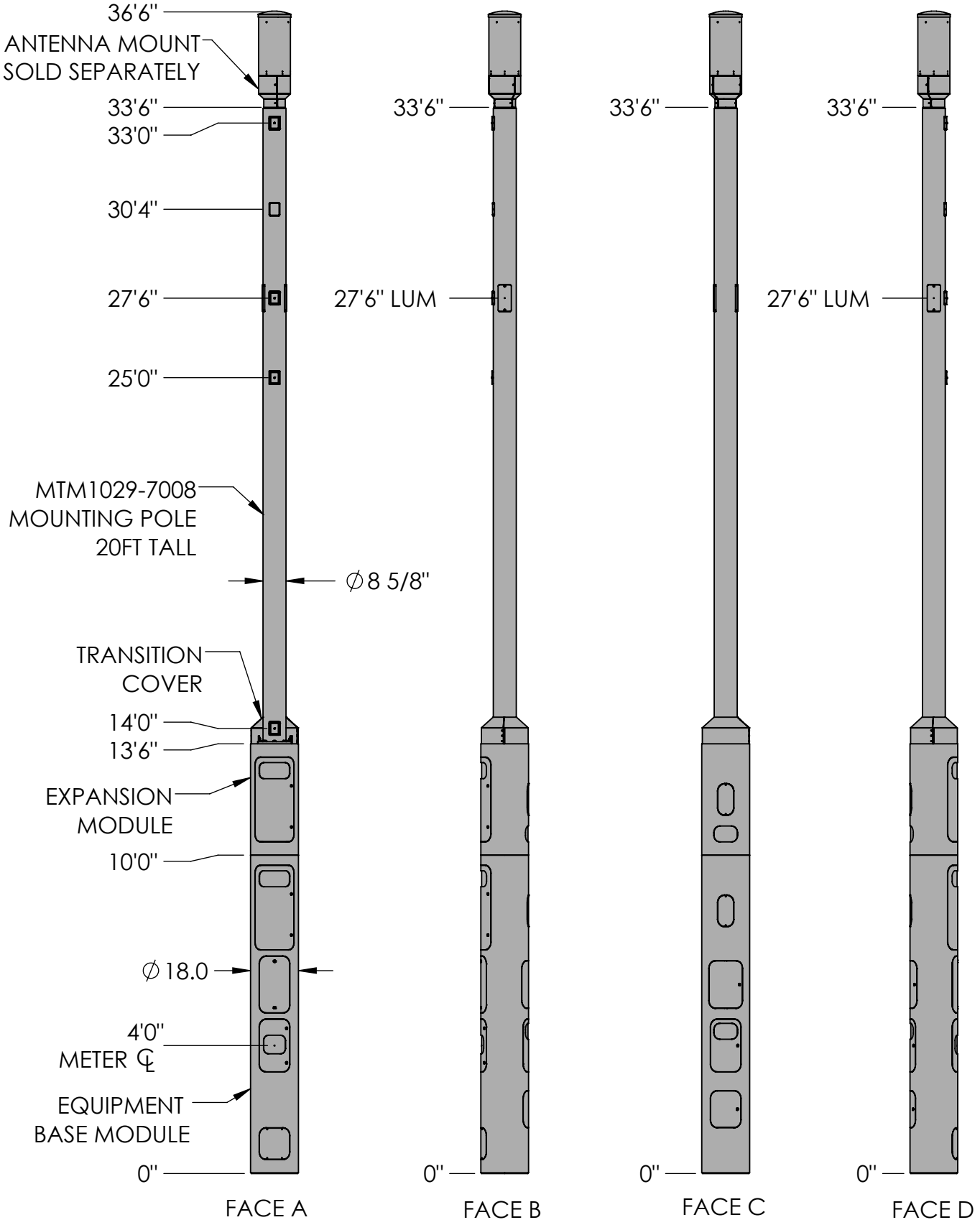

These drawings and specifications are the proprietary property of CommScope Inc. and may be used only for the specific purpose authorized in writing by CommScope Inc.

ALL DIMENSIONS ARE IN INCHES U.O.S.
TOLERANCES UNLESS OTHERWISE SPECIFIED:

.X = ±	.12	ANGLES	±2°
.XX = ±	.06	FRACTIONS	±1/32
.XXX= ±	.031		

REMOVE BURRS AND BREAK EDGES .005

DO NOT SCALE THIS PRINT

DRAWN BY: MJP	SHEET: 1 of 1	PART NUMBER: 760243184xx34x
CHECKED BY:	SCALE:	DESCRIPTION: METRO CELL, 18 IN INTEGRATED POLE SOLUTION
DATE:	MATERIAL:	DRAWING TYPE:
REVISION: B	FINISH:	ANDREW an Amphenol company
	WEIGHT:	

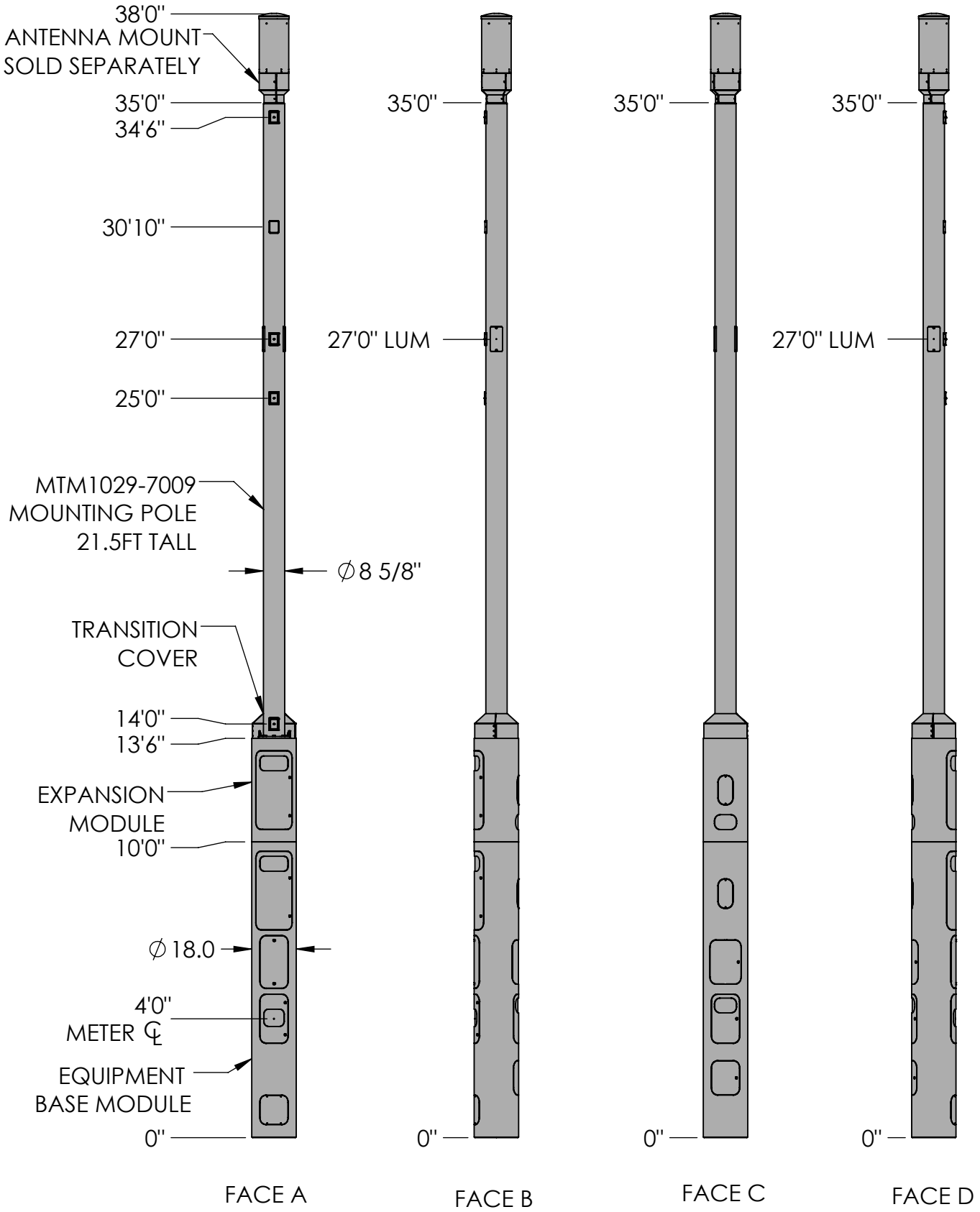

These drawings and specifications are the proprietary property of CommScope Inc. and may be used only for the specific purpose authorized in writing by CommScope Inc.

ALL DIMENSIONS ARE IN INCHES U.O.S.
TOLERANCES UNLESS OTHERWISE SPECIFIED:

.X = ±	.12	ANGLES	±2°
.XX = ±	.06	FRACTIONS	±1/32
.XXX= ±	.031		

REMOVE BURRS AND BREAK EDGES .005

DO NOT SCALE THIS PRINT

DRAWN BY: MJP	SHEET: 1 of 1	PART NUMBER: 760243184xx35x
CHECKED BY:	SCALE:	DESCRIPTION: METRO CELL, 18 IN INTEGRATED POLE SOLUTION
DATE:	MATERIAL:	DRAWING TYPE:
REVISION: B	FINISH:	ANDREW an Amphenol company
	WEIGHT:	

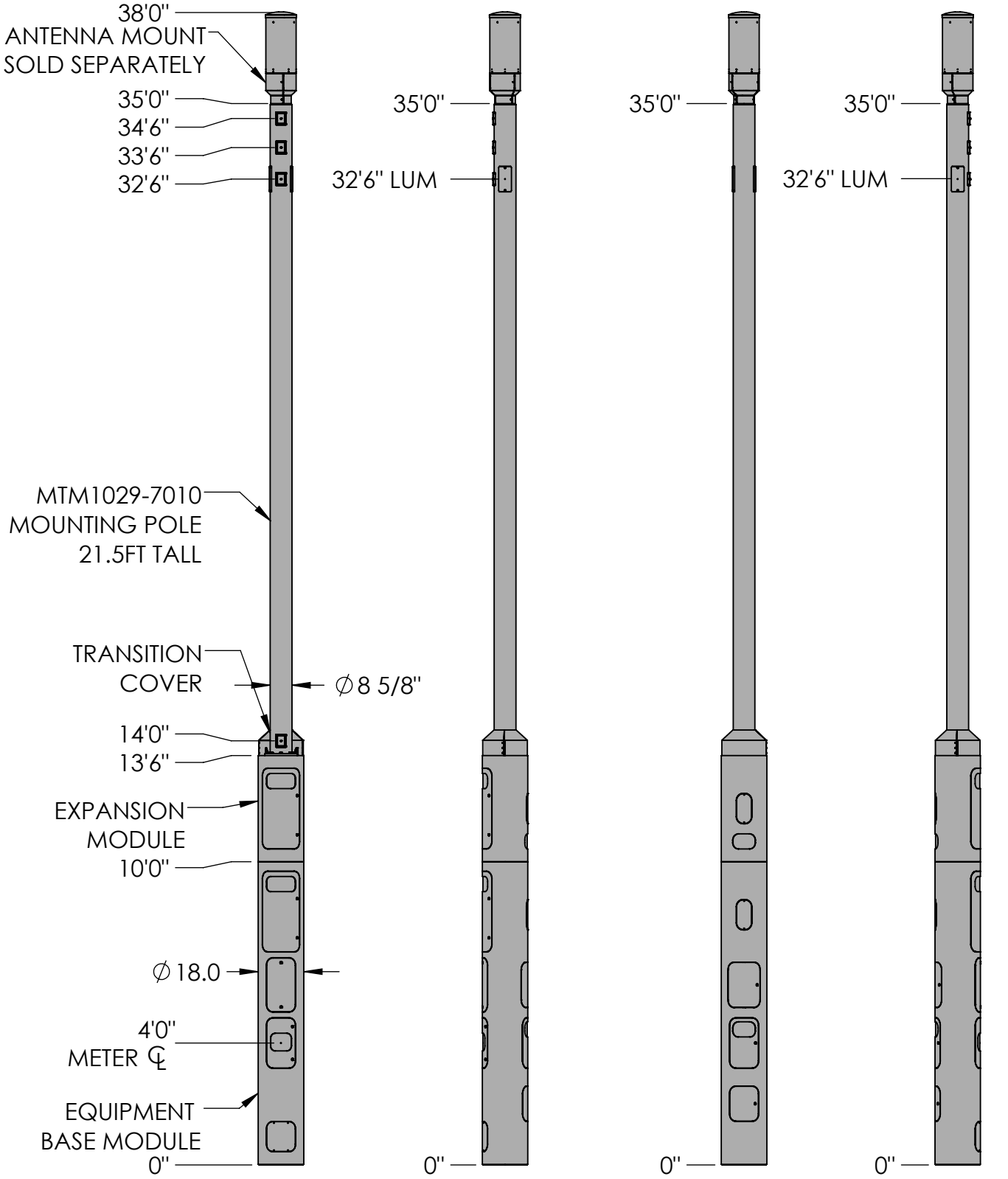

FACE A FACE B FACE C FACE D

These drawings and specifications are the proprietary property of CommScope Inc. and may be used only for the specific purpose authorized in writing by CommScope Inc.

ALL DIMENSIONS ARE IN INCHES U.O.S.
TOLERANCES UNLESS OTHERWISE SPECIFIED:

.X = ±	.12	ANGLES	±2°
.XX = ±	.06	FRACTIONS	±1/32
.XXX= ±	.031		

REMOVE BURRS AND BREAK EDGES .005

DO NOT SCALE THIS PRINT

DRAWN BY: MJP	SHEET: 1 of 1	PART NUMBER: 760243184xx35x
CHECKED BY:	SCALE:	DESCRIPTION: METRO CELL, 18 IN INTEGRATED POLE SOLUTION
DATE:	MATERIAL:	DRAWING TYPE:
REVISION: B	FINISH:	ANDREW an Amphenol company
	WEIGHT:	

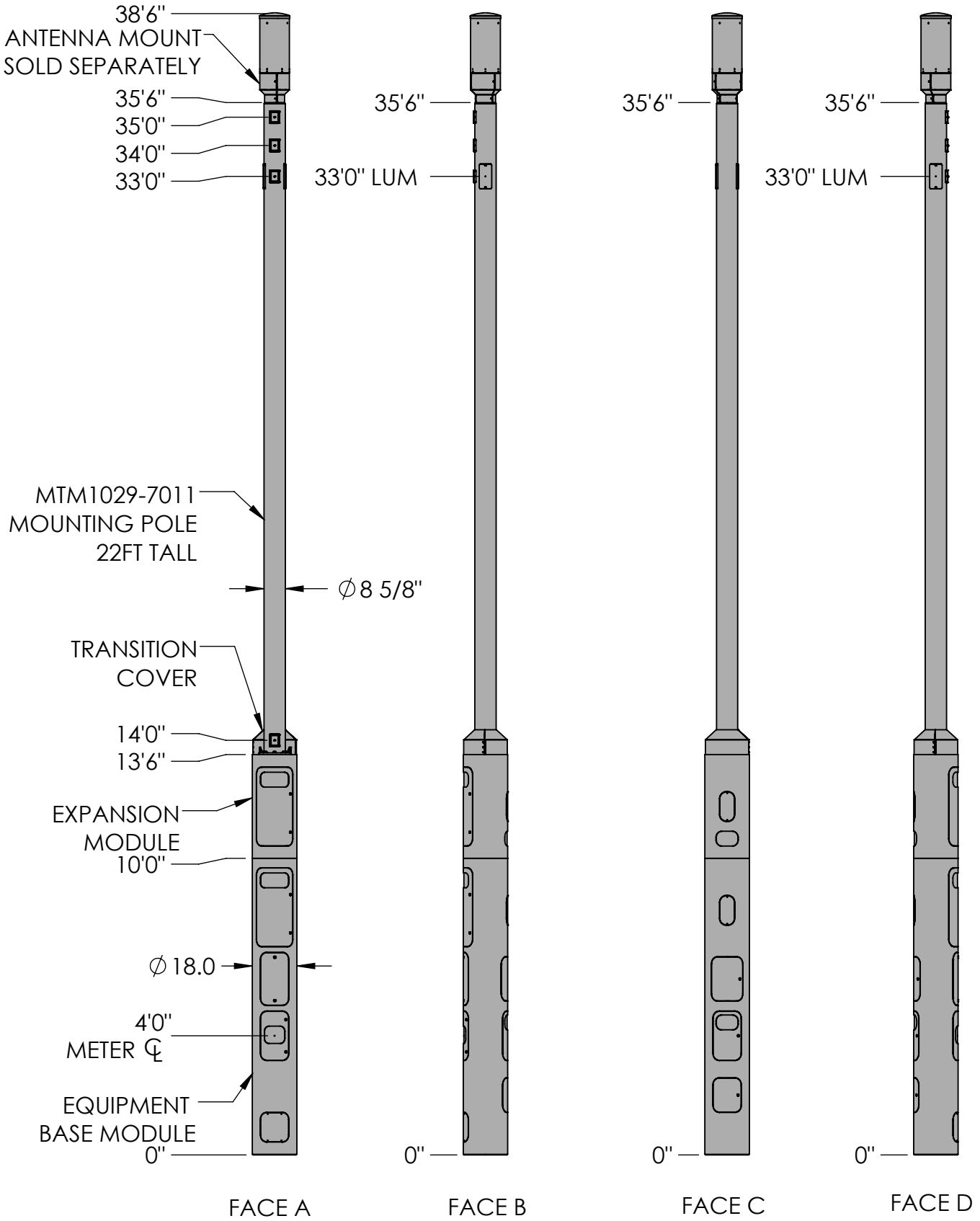

These drawings and specifications are the proprietary property of CommScope Inc. and may be used only for the specific purpose authorized in writing by CommScope Inc.

ALL DIMENSIONS ARE IN INCHES U.O.S.
TOLERANCES UNLESS OTHERWISE SPECIFIED:

.X = ±	.12	ANGLES	±2°
.XX = ±	.06	FRACTIONS	±1/32
.XXX= ±	.031		

REMOVE BURRS AND BREAK EDGES .005

DO NOT SCALE THIS PRINT

DRAWN BY: MJP	SHEET: 1 of 1	PART NUMBER: 760243184xx36x
CHECKED BY:	SCALE:	DESCRIPTION: METRO CELL, 18 IN INTEGRATED POLE SOLUTION
DATE:	MATERIAL:	DRAWING TYPE:
REVISION: B	FINISH:	ANDREW. an Amphenol company
	WEIGHT:	

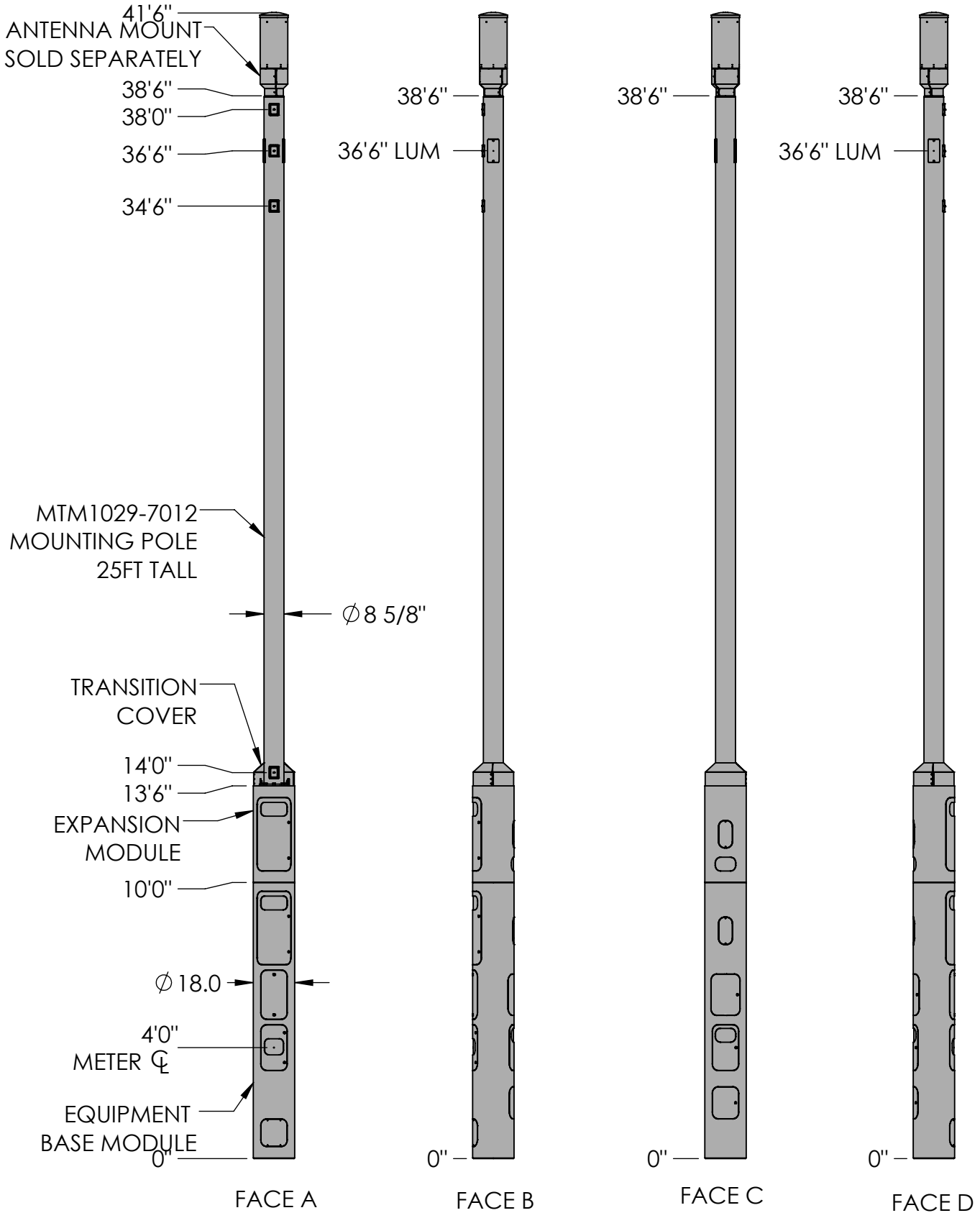

These drawings and specifications are the proprietary property of CommScope Inc. and may be used only for the specific purpose authorized in writing by CommScope Inc.

ALL DIMENSIONS ARE IN INCHES U.O.S.
TOLERANCES UNLESS OTHERWISE SPECIFIED:

.X = ±	.12	ANGLES	±2°
.XX = ±	.06	FRACTIONS	±1/32
.XXX= ±	.031		

REMOVE BURRS AND BREAK EDGES .005

DO NOT SCALE THIS PRINT

DRAWN BY: MJP	SHEET: 1 of 1	PART NUMBER: 760243184xx39x
CHECKED BY:	SCALE:	DESCRIPTION: METRO CELL, 18 IN INTEGRATED POLE SOLUTION
DATE:	MATERIAL:	DRAWING TYPE:
REVISION: B	FINISH:	ANDREW, an Amphenol company
	WEIGHT:	

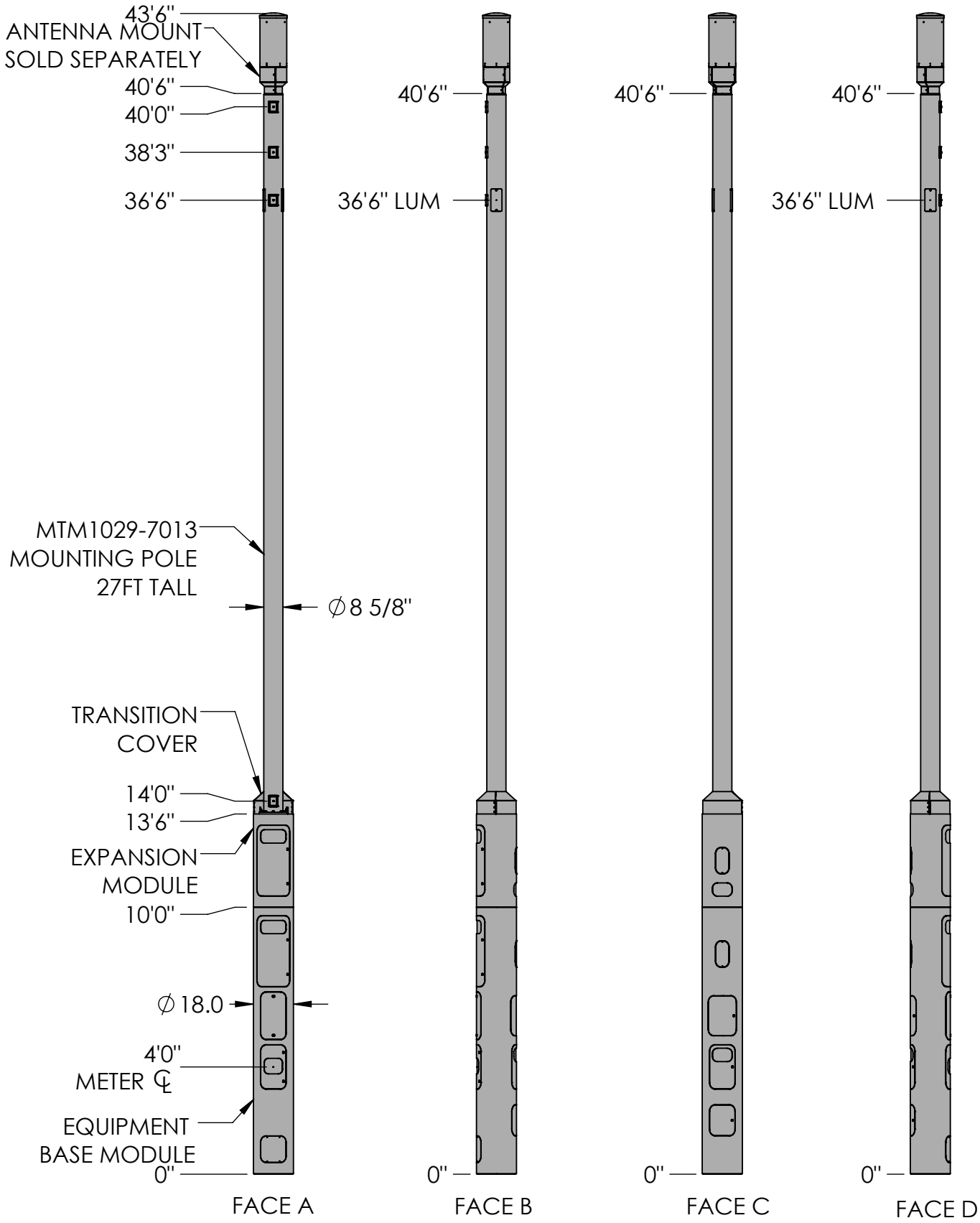

These drawings and specifications are the proprietary property of CommScope Inc. and may be used only for the specific purpose authorized in writing by CommScope Inc.

ALL DIMENSIONS ARE IN INCHES U.O.S.
TOLERANCES UNLESS OTHERWISE SPECIFIED:

.X = ±	.12	ANGLES	±2°
.XX = ±	.06	FRACTIONS	±1/32
.XXX= ±	.031		

REMOVE BURRS AND BREAK EDGES .005

DO NOT SCALE THIS PRINT

DRAWN BY: MJP	SHEET: 1 of 1	PART NUMBER: 760243184xx41x
CHECKED BY:	SCALE:	DESCRIPTION: METRO CELL, 18 IN INTEGRATED POLE SOLUTION
DATE:	MATERIAL:	DRAWING TYPE:
REVISION: B	FINISH:	ANDREW an Amphenol company
	WEIGHT:	

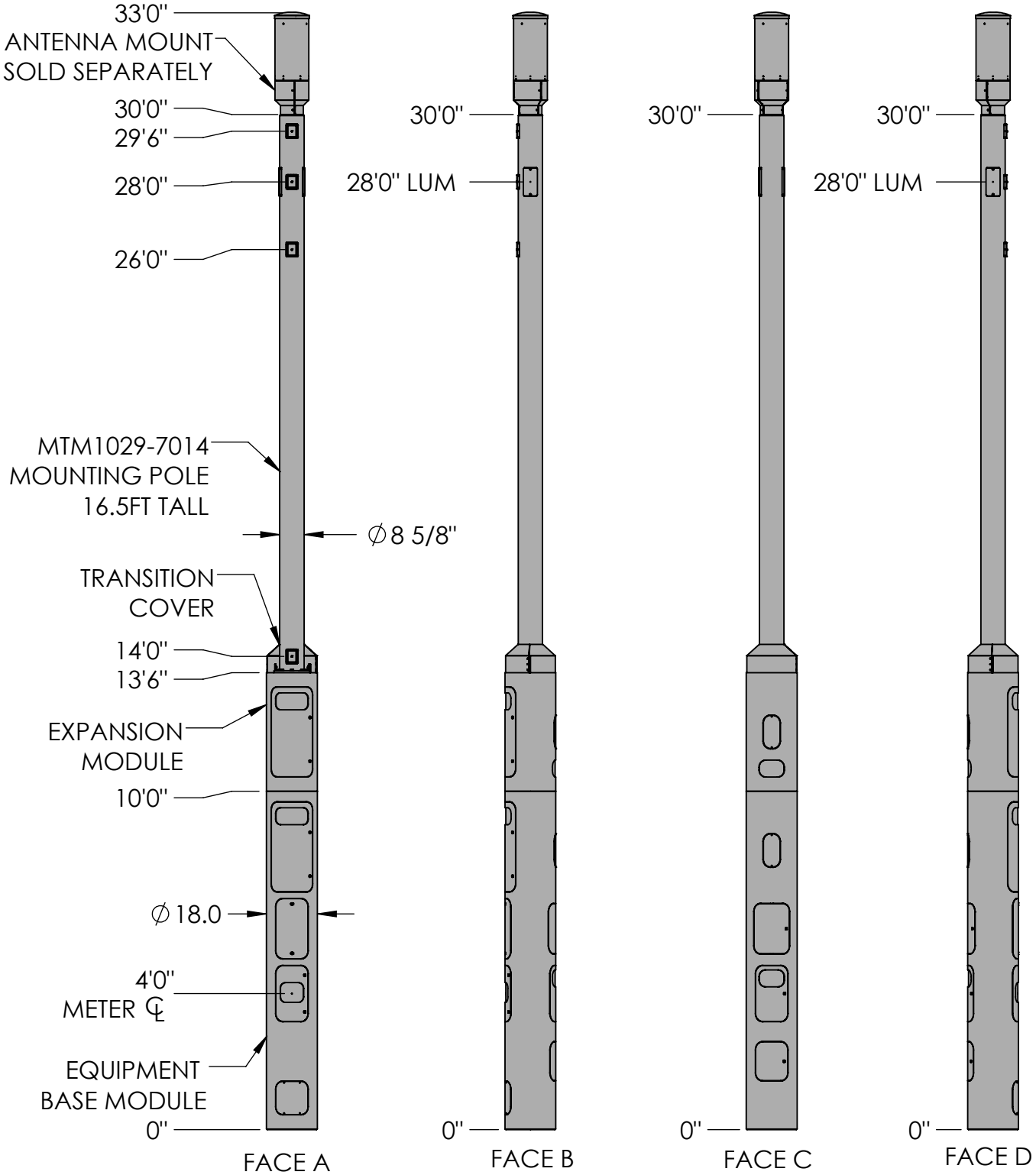

These drawings and specifications are the proprietary property of CommScope Inc. and may be used only for the specific purpose authorized in writing by CommScope Inc.

ALL DIMENSIONS ARE IN INCHES U.O.S.
TOLERANCES UNLESS OTHERWISE SPECIFIED:

.X = ±	.12	ANGLES	±2°
.XX = ±	.06	FRACTIONS	±1/32
.XXX= ±	.031		

REMOVE BURRS AND BREAK EDGES .005

DO NOT SCALE THIS PRINT

DRAWN BY: MJP	SHEET: 1 of 1	PART NUMBER: 760243184xx30x
CHECKED BY:	SCALE:	DESCRIPTION: METRO CELL, 18 IN INTEGRATED POLE SOLUTION
DATE:	MATERIAL:	DRAWING TYPE:
REVISION: B	FINISH:	ANDREW. an Amphenol company
	WEIGHT:	

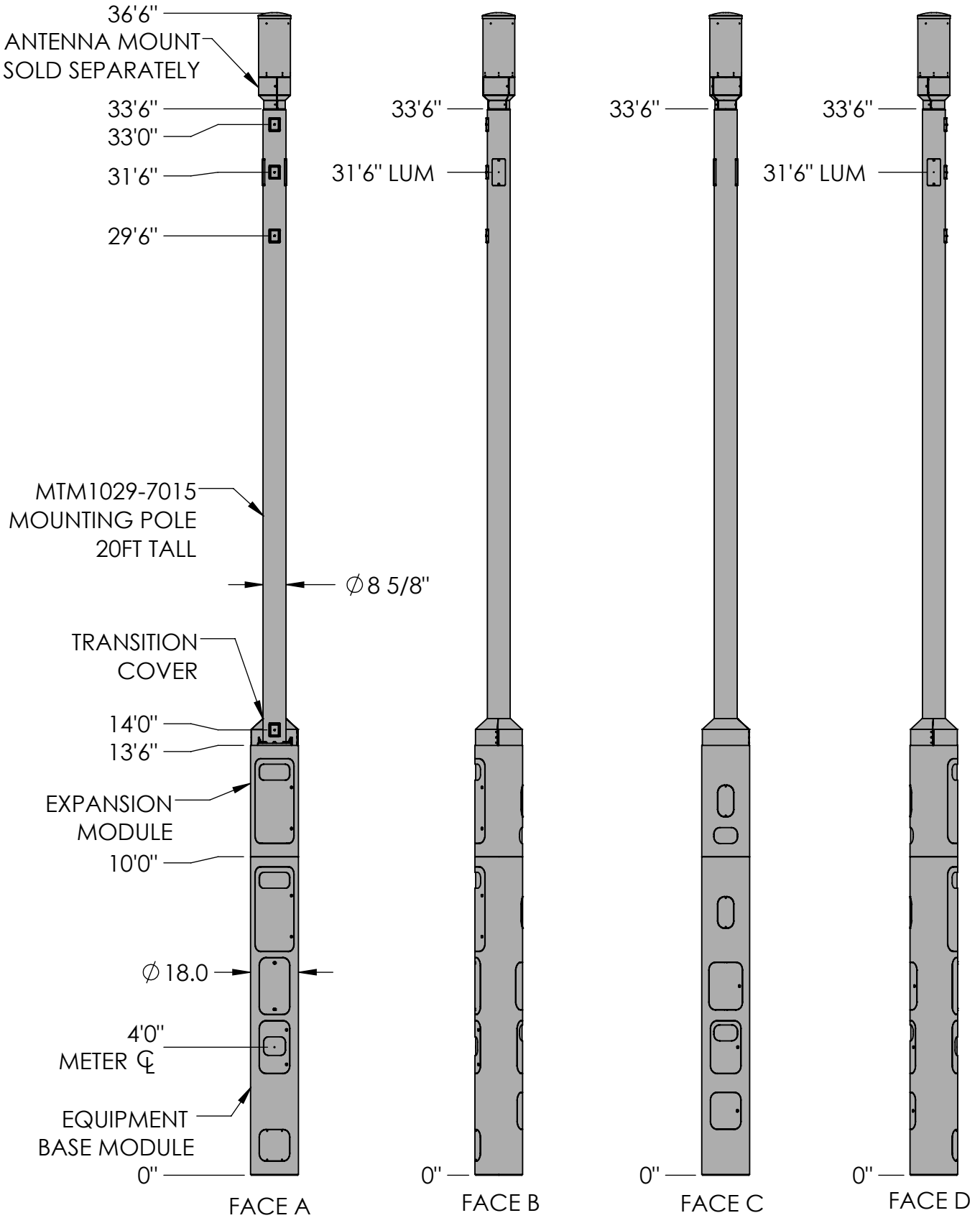

These drawings and specifications are the proprietary property of CommScope Inc. and may be used only for the specific purpose authorized in writing by CommScope Inc.

ALL DIMENSIONS ARE IN INCHES U.O.S.
TOLERANCES UNLESS OTHERWISE SPECIFIED:

.X = ±	.12	ANGLES	±2°
.XX = ±	.06	FRACTIONS	±1/32
.XXX= ±	.031		

REMOVE BURRS AND BREAK EDGES .005

DO NOT SCALE THIS PRINT

DRAWN BY: MJP	SHEET: 1 of 1	PART NUMBER: 760243184xx34x
CHECKED BY:	SCALE:	DESCRIPTION: METRO CELL, 18 IN INTEGRATED POLE SOLUTION
DATE:	MATERIAL:	DRAWING TYPE:
REVISION: B	FINISH:	ANDREW an Amphenol company
	WEIGHT:	

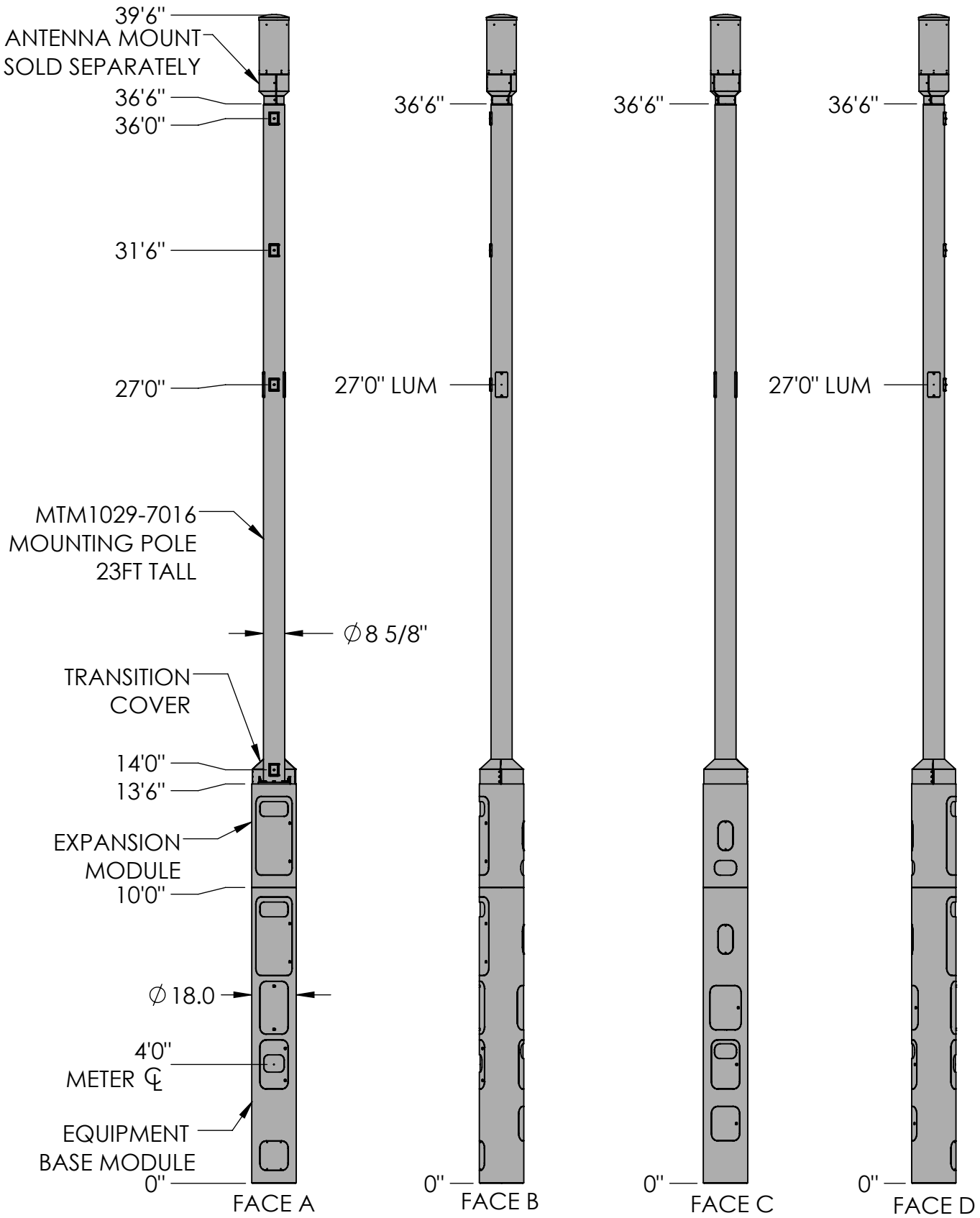

These drawings and specifications are the proprietary property of CommScope Inc. and may be used only for the specific purpose authorized in writing by CommScope Inc.

ALL DIMENSIONS ARE IN INCHES U.O.S.
TOLERANCES UNLESS OTHERWISE SPECIFIED:

.X = ±	.12	ANGLES	±2°
.XX = ±	.06	FRACTIONS	±1/32
.XXX= ±	.031		

REMOVE BURRS AND BREAK EDGES .005

DO NOT SCALE THIS PRINT

DRAWN BY: MJP	SHEET: 1 of 1	PART NUMBER: 760243184xx37x
CHECKED BY:	SCALE:	DESCRIPTION: METRO CELL, 18 IN INTEGRATED POLE SOLUTION
DATE:	MATERIAL:	DRAWING TYPE:
REVISION: B	FINISH:	ANDREW an Amphenol company
	WEIGHT:	

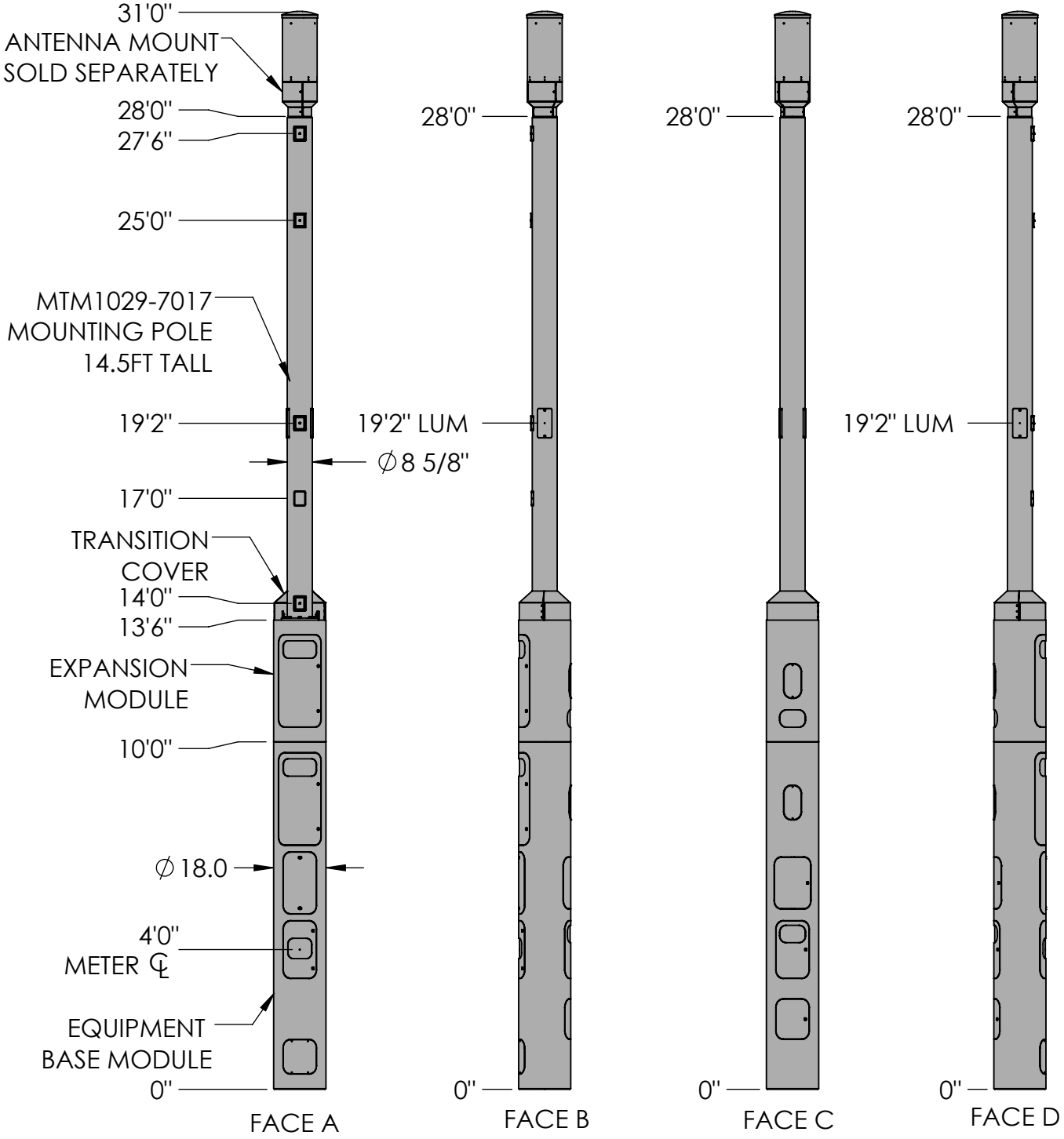

These drawings and specifications are the proprietary property of CommScope Inc. and may be used only for the specific purpose authorized in writing by CommScope Inc.

ALL DIMENSIONS ARE IN INCHES U.O.S.
TOLERANCES UNLESS OTHERWISE SPECIFIED:

.X = ±	.12	ANGLES	±2°
.XX = ±	.06	FRACTIONS	±1/32
.XXX= ±	.031		

REMOVE BURRS AND BREAK EDGES .005

DO NOT SCALE THIS PRINT

DRAWN BY: MJP	SHEET: 1 of 1	PART NUMBER: 760243184xx28x
CHECKED BY:	SCALE:	DESCRIPTION: METRO CELL, 18 IN INTEGRATED POLE SOLUTION
DATE:	MATERIAL:	DRAWING TYPE:
REVISION: B	FINISH:	ANDREW an Amphenol company
	WEIGHT:	

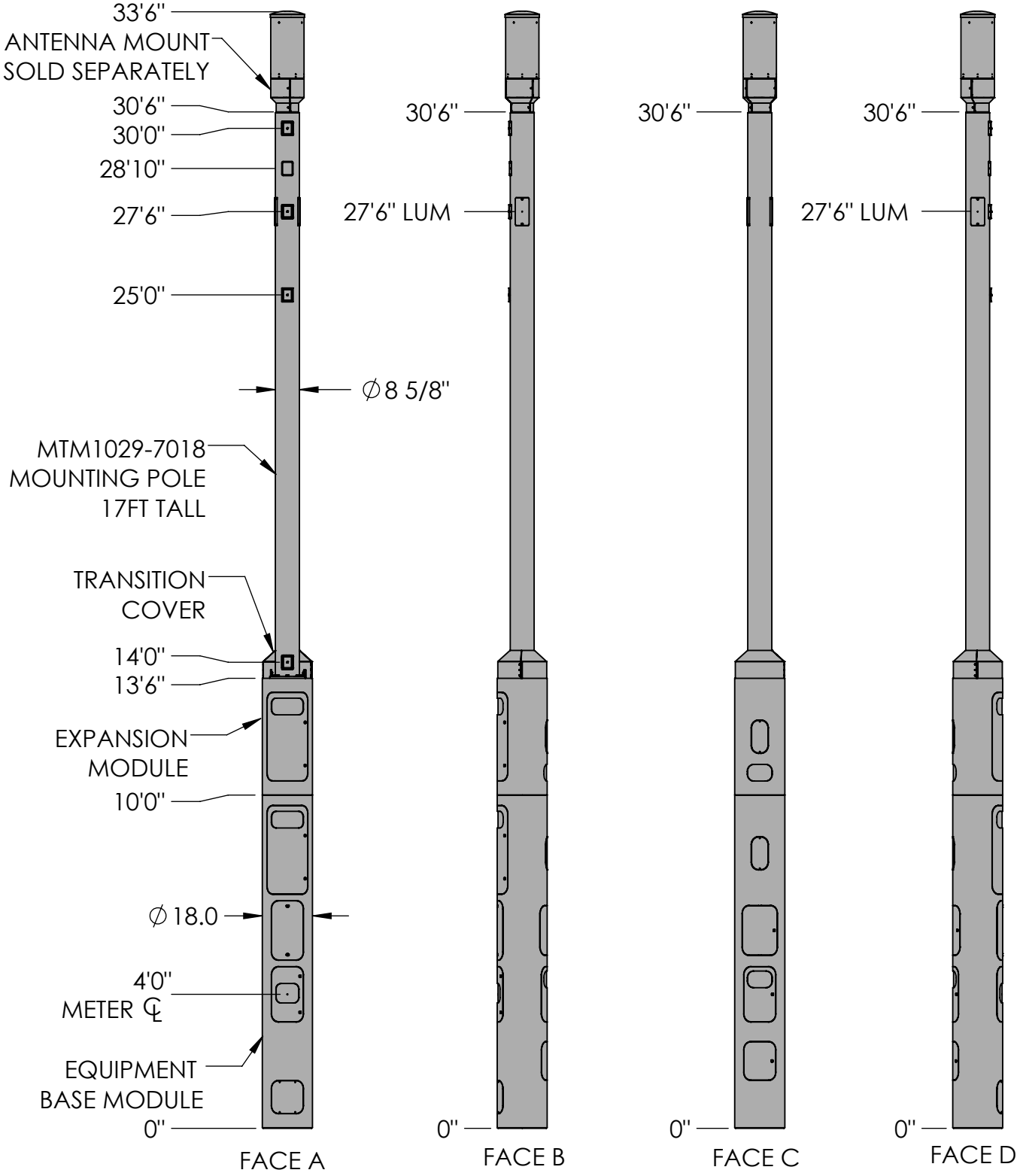

These drawings and specifications are the proprietary property of CommScope Inc. and may be used only for the specific purpose authorized in writing by CommScope Inc.

ALL DIMENSIONS ARE IN INCHES U.O.S.
TOLERANCES UNLESS OTHERWISE SPECIFIED:

.X = ±	.12	ANGLES	±2°
.XX = ±	.06	FRACTIONS	±1/32
.XXX= ±	.031		

REMOVE BURRS AND BREAK EDGES .005

DO NOT SCALE THIS PRINT

DRAWN BY: MJP	SHEET: 1 of 1	PART NUMBER: 760243184xx31x
CHECKED BY:	SCALE:	DESCRIPTION: METRO CELL, 18 IN INTEGRATED POLE SOLUTION
DATE:	MATERIAL:	DRAWING TYPE:
REVISION: B	FINISH:	ANDREW, an Amphenol company
	WEIGHT:	

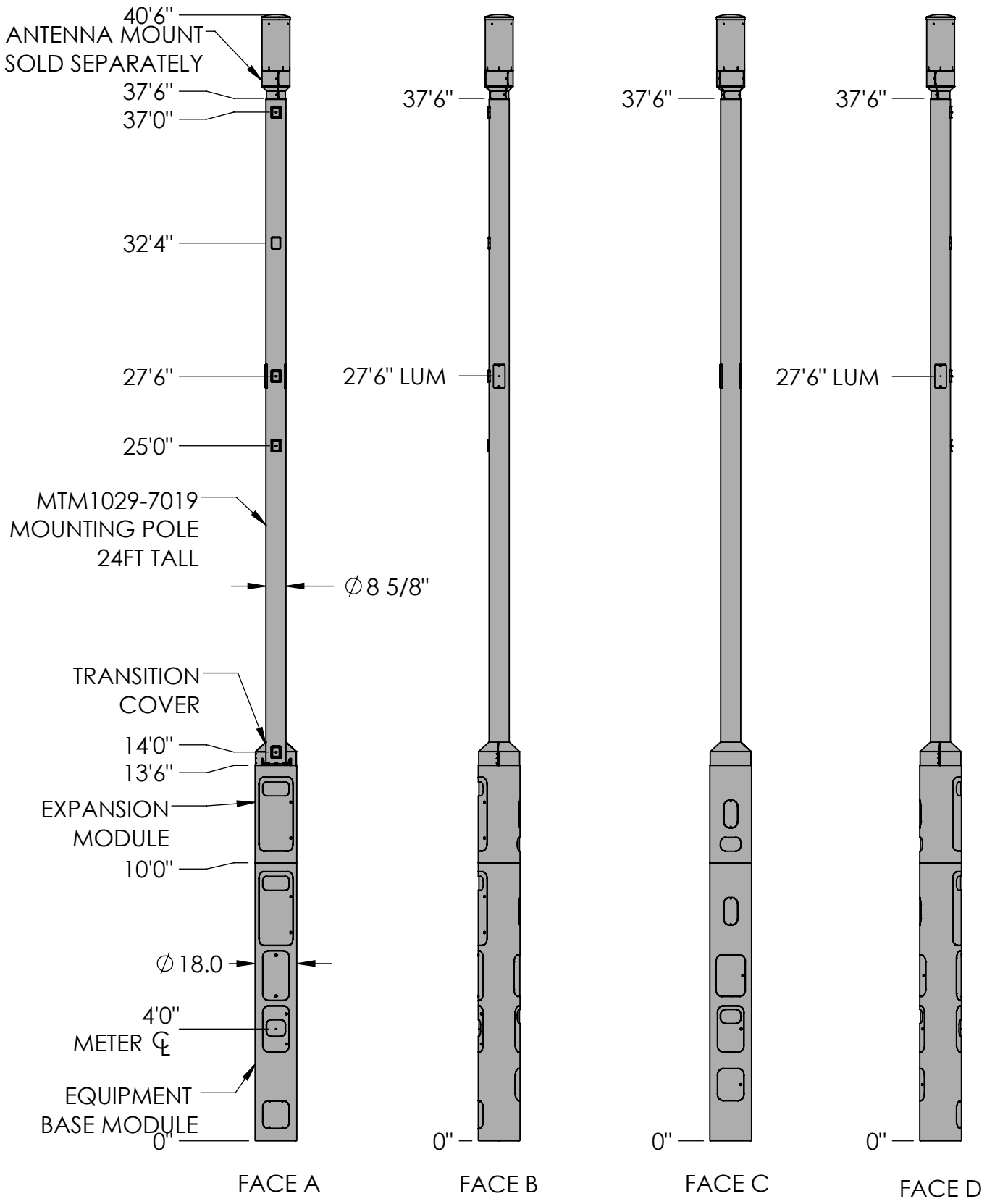

These drawings and specifications are the proprietary property of CommScope Inc. and may be used only for the specific purpose authorized in writing by CommScope Inc.

ALL DIMENSIONS ARE IN INCHES U.O.S.
TOLERANCES UNLESS OTHERWISE SPECIFIED:

.X = ±	.12	ANGLES	±2°
.XX = ±	.06	FRACTIONS	±1/32
.XXX= ±	.031		

REMOVE BURRS AND BREAK EDGES .005

DO NOT SCALE THIS PRINT

DRAWN BY: MJP	SHEET: 1 of 1	PART NUMBER: 760243184xx38x
CHECKED BY:	SCALE:	DESCRIPTION: METRO CELL, 18 IN INTEGRATED POLE SOLUTION
DATE:	MATERIAL:	DRAWING TYPE:
REVISION: B	FINISH:	ANDREW. an Amphenol company
	WEIGHT:	

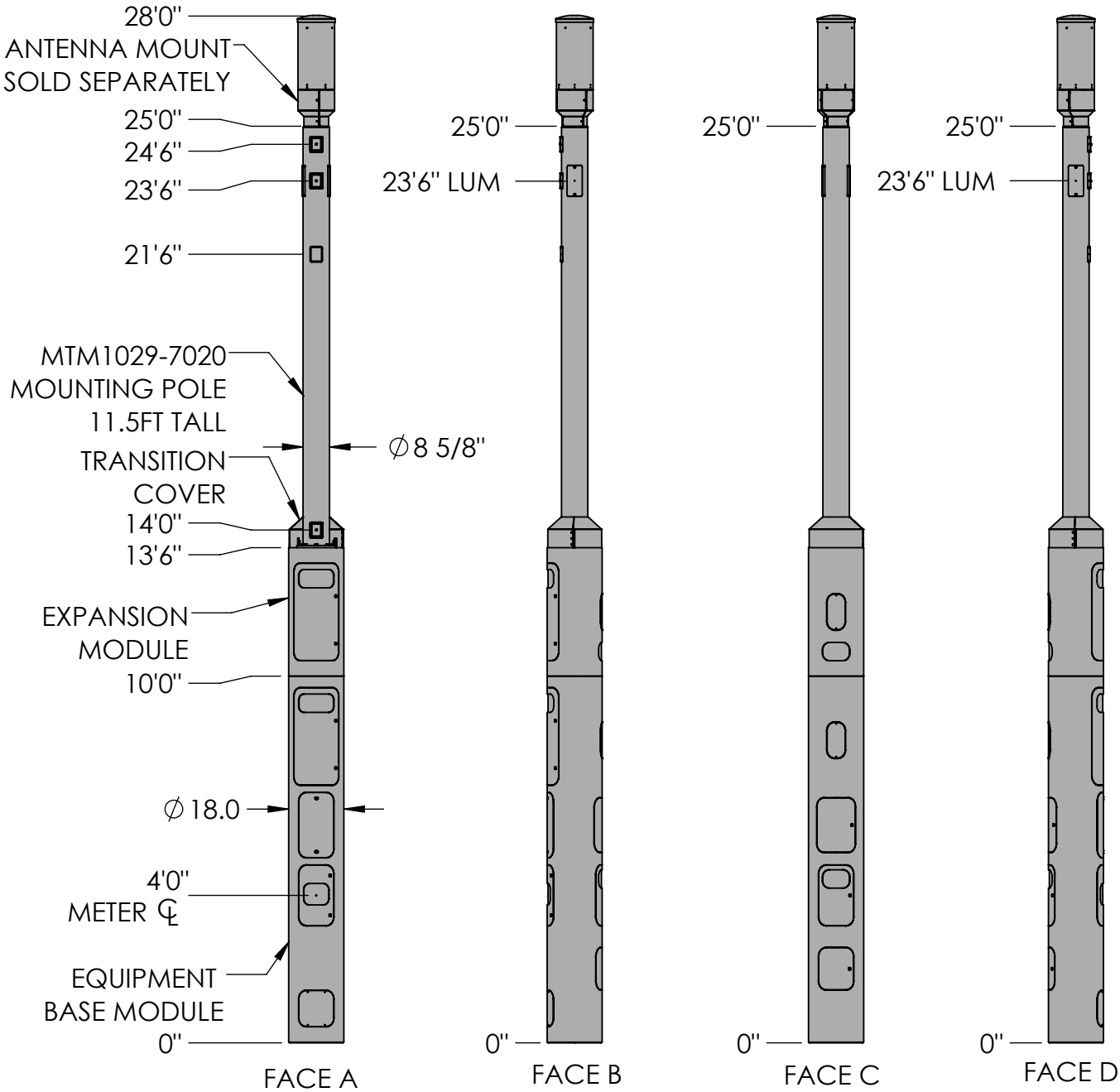

These drawings and specifications are the proprietary property of CommScope Inc. and may be used only for the specific purpose authorized in writing by CommScope Inc.

ALL DIMENSIONS ARE IN INCHES U.O.S.
TOLERANCES UNLESS OTHERWISE SPECIFIED:

.X = ±	.12	ANGLES	±2°
.XX = ±	.06	FRACTIONS	±1/32
.XXX= ±	.031		

REMOVE BURRS AND BREAK EDGES .005

DO NOT SCALE THIS PRINT

DRAWN BY: MJP	SHEET: 1 of 1	PART NUMBER: 760243184xx25x
CHECKED BY:	SCALE:	DESCRIPTION: METRO CELL, 18 IN INTEGRATED POLE SOLUTION
DATE:	MATERIAL:	DRAWING TYPE:
REVISION: B	FINISH:	ANDREW. an Amphenol company
	WEIGHT:	

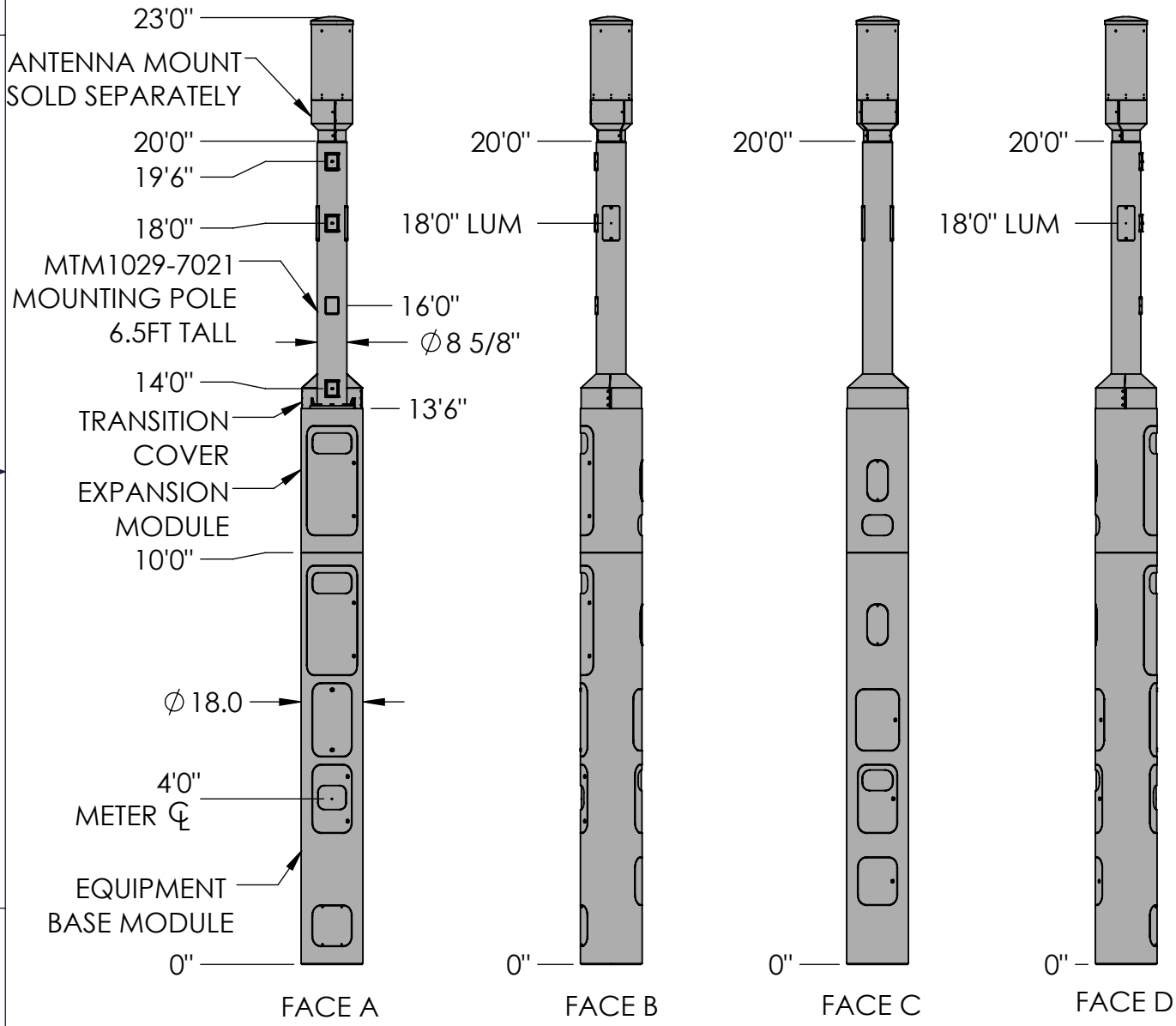

These drawings and specifications are the proprietary property of CommScope Inc. and may be used only for the specific purpose authorized in writing by CommScope Inc.

ALL DIMENSIONS ARE IN INCHES U.O.S.
TOLERANCES UNLESS OTHERWISE SPECIFIED:

.X = ±	.12	ANGLES	±2°
.XX = ±	.06	FRACTIONS	±1/32
.XXX= ±	.031		

REMOVE BURRS AND BREAK EDGES .005

DO NOT SCALE THIS PRINT

DRAWN BY: MJP	SHEET: 1 of 1	PART NUMBER: 760243184xx20x
CHECKED BY:	SCALE:	DESCRIPTION: METRO CELL, 18 IN INTEGRATED POLE SOLUTION
DATE:	MATERIAL:	DRAWING TYPE:
REVISION: B	FINISH:	ANDREW an Amphenol company
	WEIGHT:	

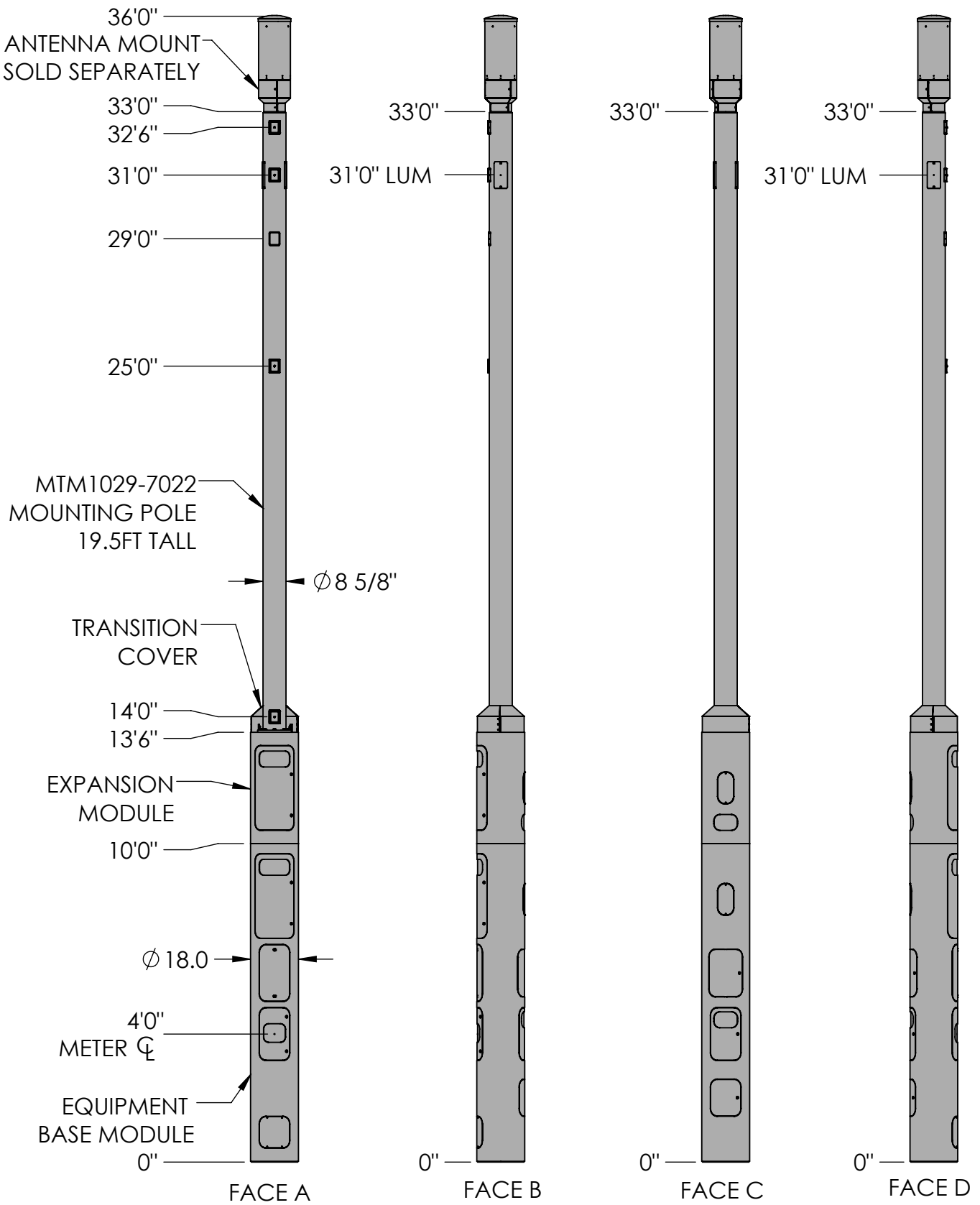

These drawings and specifications are the proprietary property of CommScope Inc. and may be used only for the specific purpose authorized in writing by CommScope Inc.

ALL DIMENSIONS ARE IN INCHES U.O.S.
TOLERANCES UNLESS OTHERWISE SPECIFIED:

.X = ±	.12	ANGLES	±2°
.XX = ±	.06	FRACTIONS	±1/32
.XXX= ±	.031		

REMOVE BURRS AND BREAK EDGES .005

DO NOT SCALE THIS PRINT

DRAWN BY: MJP	SHEET: 1 of 1	PART NUMBER: 760243184xx33x
CHECKED BY:	SCALE:	DESCRIPTION: METRO CELL, 18 IN INTEGRATED POLE SOLUTION
DATE:	MATERIAL:	DRAWING TYPE:
REVISION: B	FINISH:	ANDREW. an Amphenol company
	WEIGHT:	

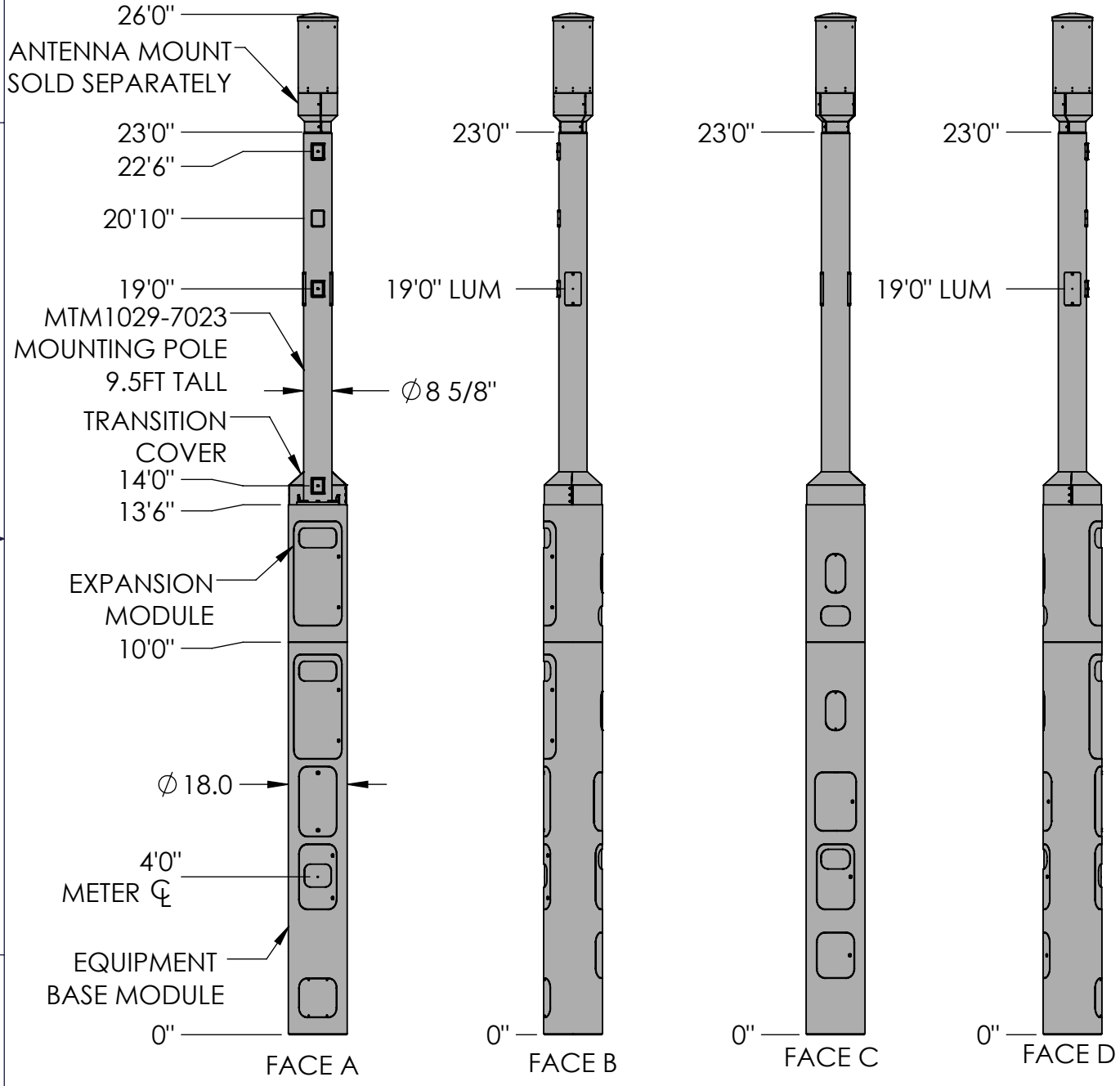

These drawings and specifications are the proprietary property of CommScope Inc. and may be used only for the specific purpose authorized in writing by CommScope Inc.

ALL DIMENSIONS ARE IN INCHES U.O.S.
TOLERANCES UNLESS OTHERWISE SPECIFIED:

.X = ±	.12	ANGLES	±2°
.XX = ±	.06	FRACTIONS	±1/32
.XXX= ±	.031		

REMOVE BURRS AND BREAK EDGES .005

DO NOT SCALE THIS PRINT

DRAWN BY: MJP	SHEET: 1 of 1	PART NUMBER: 760243184xx23x
CHECKED BY:	SCALE:	DESCRIPTION: METRO CELL, 18 IN INTEGRATED POLE SOLUTION
DATE:	MATERIAL:	DRAWING TYPE:
REVISION: B	FINISH:	ANDREW an Amphenol company
	WEIGHT:	

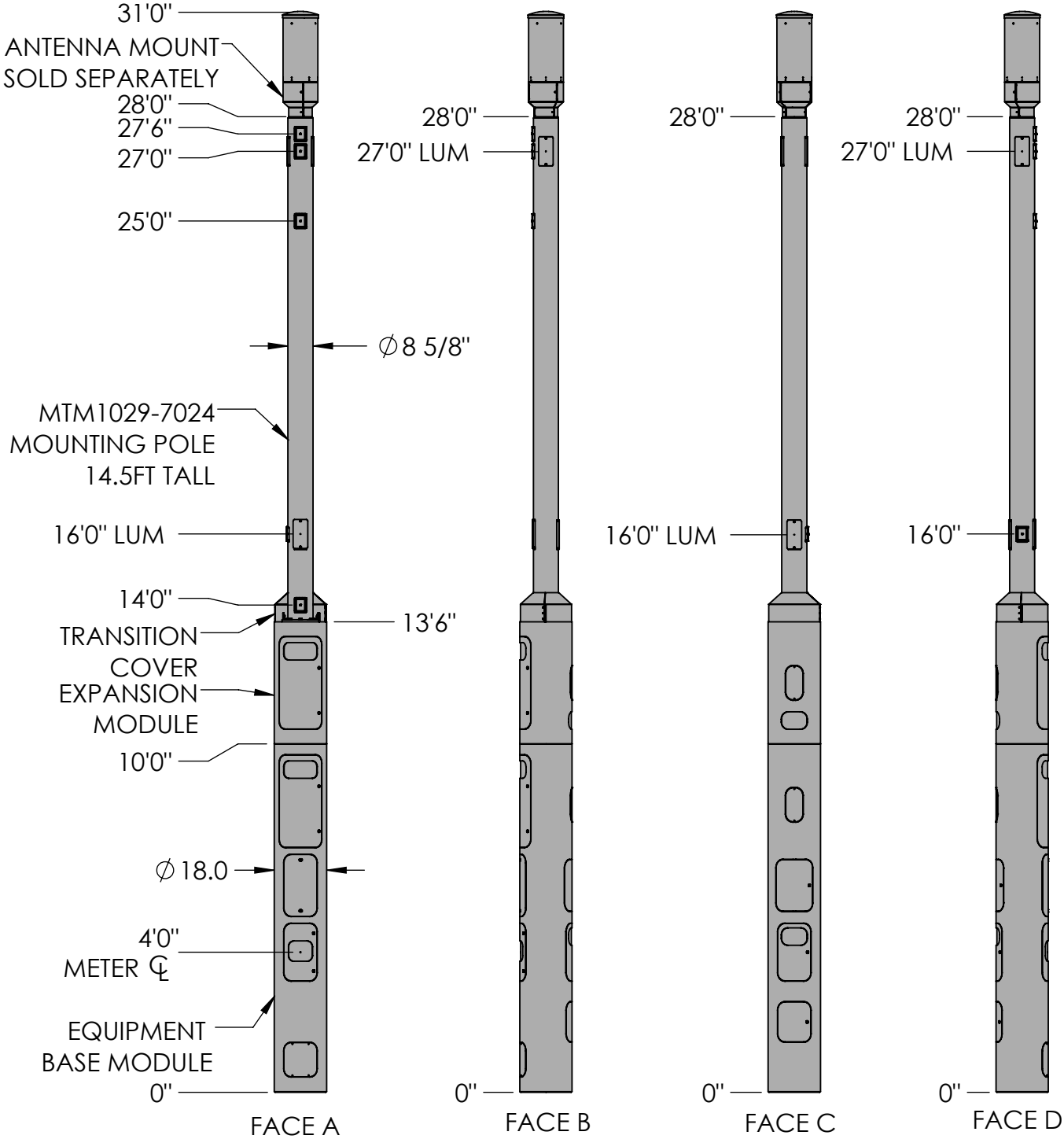

These drawings and specifications are the proprietary property of CommScope Inc. and may be used only for the specific purpose authorized in writing by CommScope Inc.

ALL DIMENSIONS ARE IN INCHES U.O.S.
TOLERANCES UNLESS OTHERWISE SPECIFIED:

.X = ±	.12	ANGLES	±2°
.XX = ±	.06	FRACTIONS	±1/32
.XXX= ±	.031		

REMOVE BURRS AND BREAK EDGES .005

DO NOT SCALE THIS PRINT

DRAWN BY: MJP	SHEET: 1 of 1	PART NUMBER: 760243184xx28x
CHECKED BY:	SCALE:	DESCRIPTION: METRO CELL, 18 IN INTEGRATED POLE SOLUTION
DATE:	MATERIAL:	DRAWING TYPE:
REVISION: B	FINISH:	ANDREW. an Amphenol company
	WEIGHT:	