REVISIONS			
REV.	DESCRIPTION	BY	DATE
B	UPDATED FORMAT	MJP	09/22/26

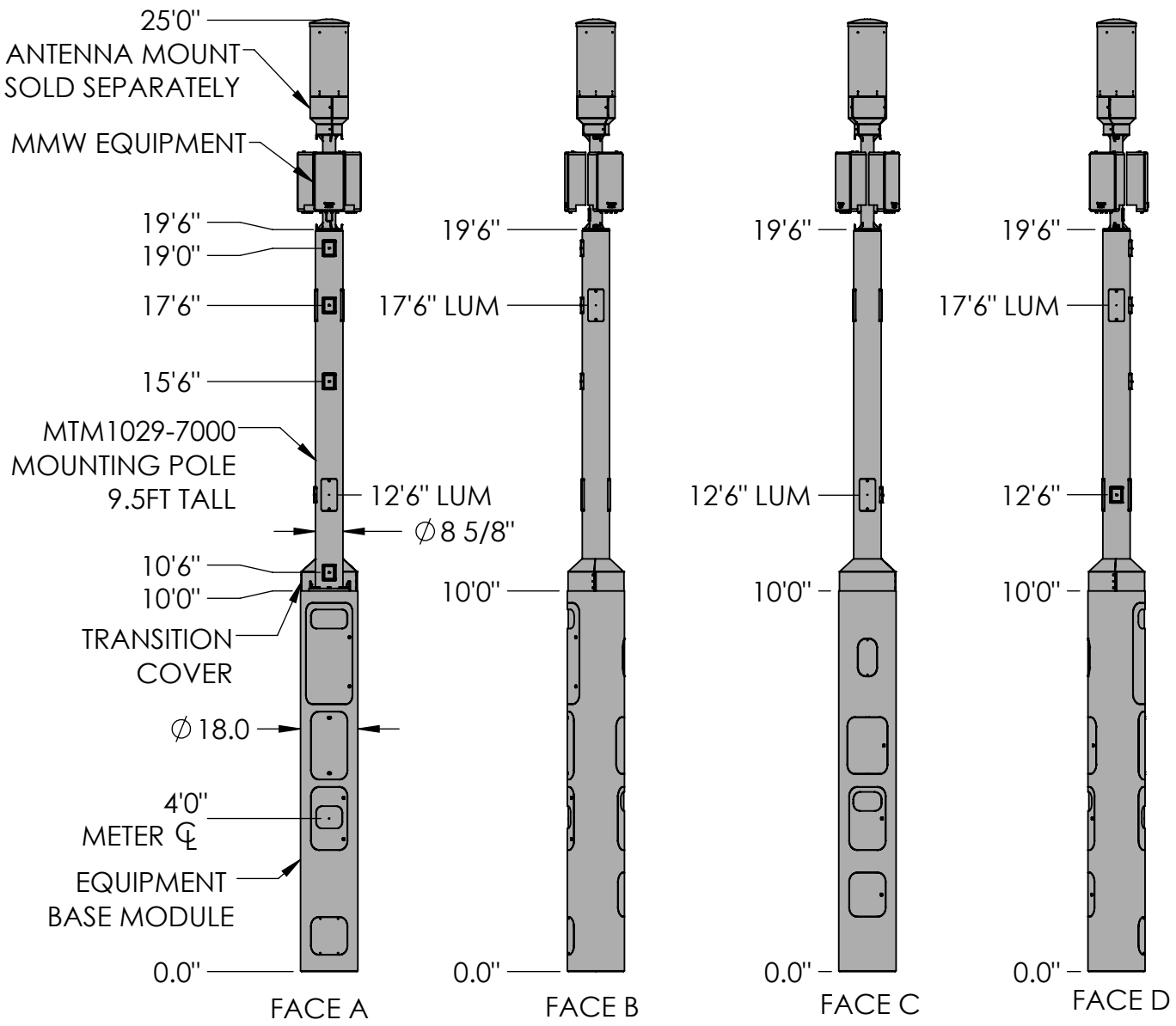

These drawings and specifications are the proprietary property of CommScope Inc. and may be used only for the specific purpose authorized in writing by CommScope Inc.

ALL DIMENSIONS ARE IN INCHES U.O.S.
TOLERANCES UNLESS OTHERWISE SPECIFIED:

.X = ±	.12	ANGLES	±2°
.XX = ±	.06	FRACTIONS	±1/32
.XXX= ±	.031		

REMOVE BURRS AND BREAK EDGES .005

DO NOT SCALE THIS PRINT

DRAWN BY: MJP	SHEET: 1 of 1	PART NUMBER: 760239946xx20xS
CHECKED BY:	SCALE:	DESCRIPTION: METRO CELL, 18 IN INTEGRATED POLE SOLUTION
DATE:	MATERIAL:	DRAWING TYPE:
REVISION: B	FINISH:	ANDREW an Amphenol company
	WEIGHT:	

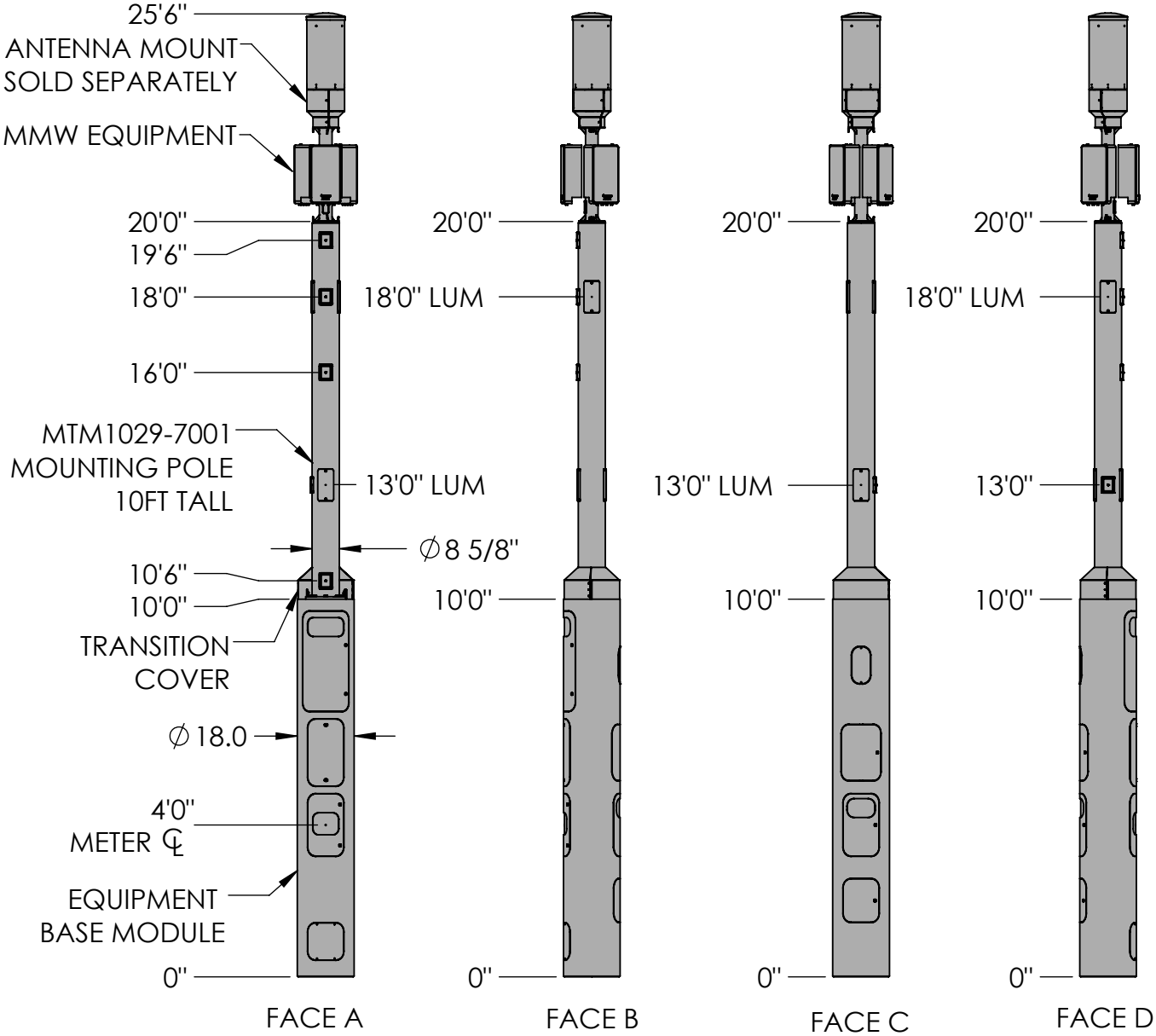

These drawings and specifications are the proprietary property of CommScope Inc. and may be used only for the specific purpose authorized in writing by CommScope Inc.

ALL DIMENSIONS ARE IN INCHES U.O.S.
TOLERANCES UNLESS OTHERWISE SPECIFIED:

.X = ±	.12	ANGLES	±2°
.XX = ±	.06	FRACTIONS	±1/32
.XXX= ±	.031		

REMOVE BURRS AND BREAK EDGES .005

DO NOT SCALE THIS PRINT

DRAWN BY: MJP	SHEET: 1 of 1	PART NUMBER: 760239946xx20xS
CHECKED BY:	SCALE:	DESCRIPTION: METRO CELL, 18 IN INTEGRATED POLE SOLUTION
DATE:	MATERIAL:	DRAWING TYPE:
REVISION: B	FINISH:	ANDREW an Amphenol company
	WEIGHT:	

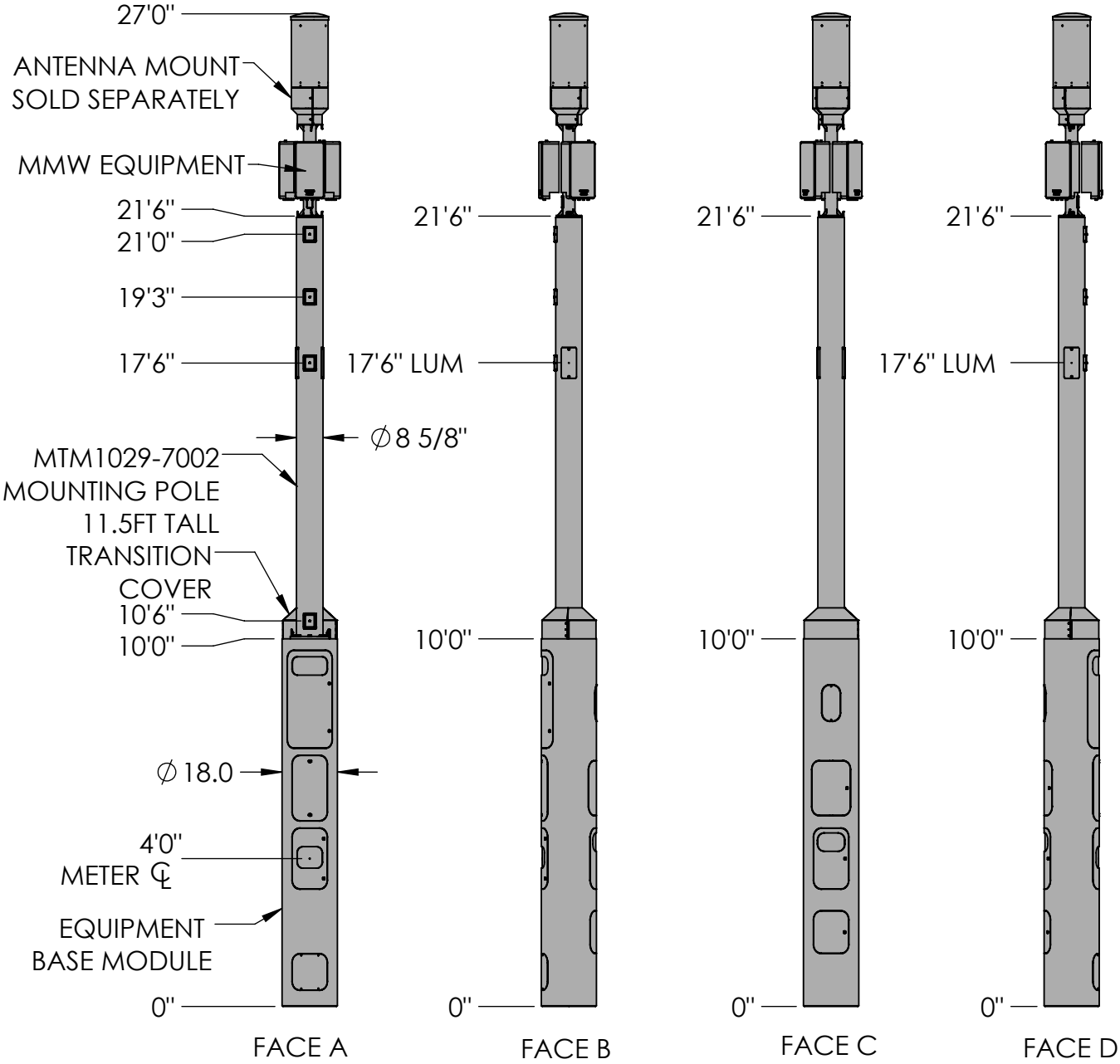

These drawings and specifications are the proprietary property of CommScope Inc. and may be used only for the specific purpose authorized in writing by CommScope Inc.

ALL DIMENSIONS ARE IN INCHES U.O.S.
TOLERANCES UNLESS OTHERWISE SPECIFIED:

.X = ±	.12	ANGLES	±2°
.XX = ±	.06	FRACTIONS	±1/32
.XXX= ±	.031		

REMOVE BURRS AND BREAK EDGES .005

DO NOT SCALE THIS PRINT

DRAWN BY: MJP	SHEET: 1 of 1	PART NUMBER: 760239946xx22xS
CHECKED BY:	SCALE:	DESCRIPTION: METRO CELL, 18 IN INTEGRATED POLE SOLUTION
DATE:	MATERIAL:	DRAWING TYPE:
REVISION: B	FINISH:	ANDREW an Amphenol company
	WEIGHT:	

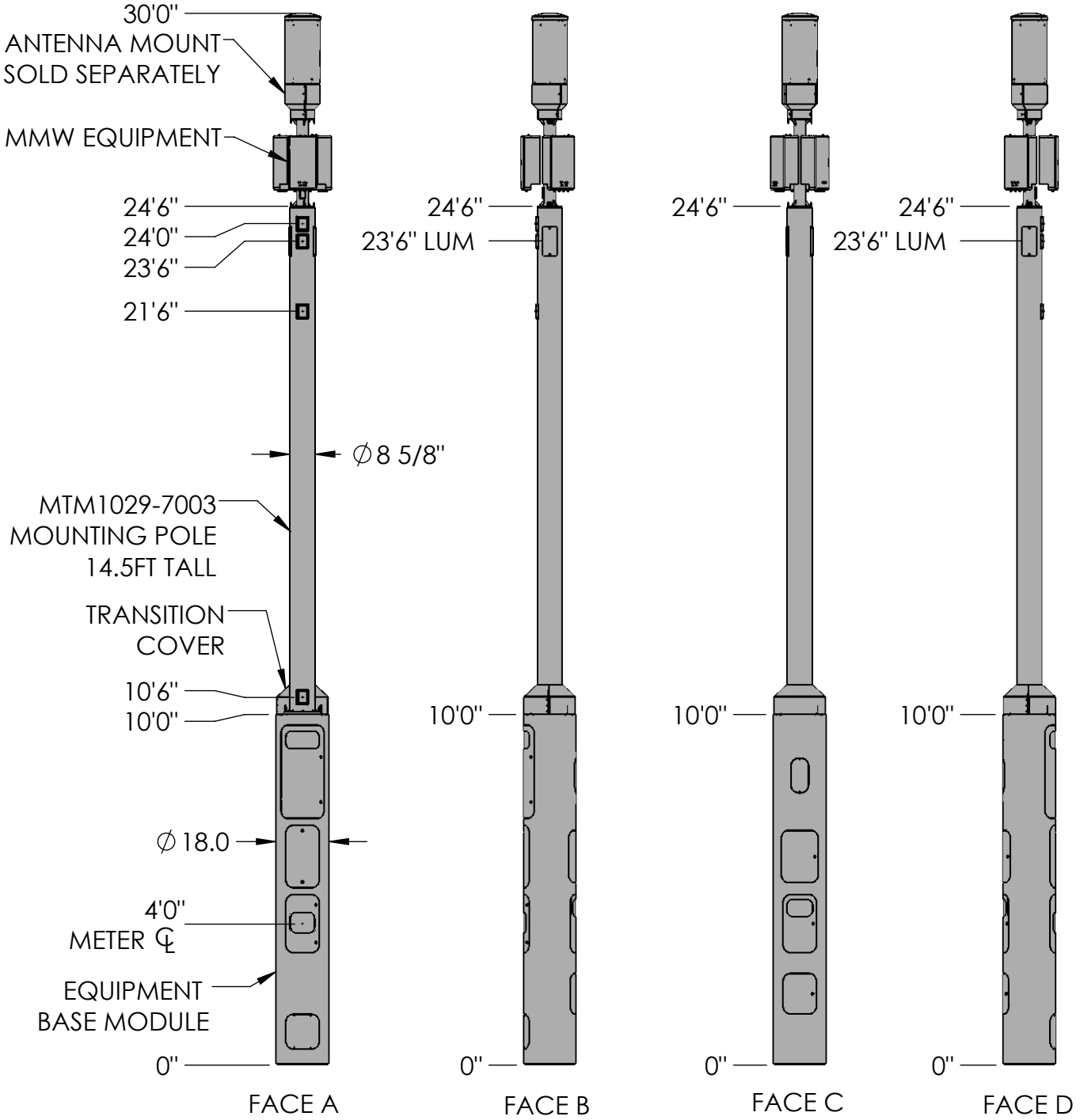

These drawings and specifications are the proprietary property of CommScope Inc. and may be used only for the specific purpose authorized in writing by CommScope Inc.

ALL DIMENSIONS ARE IN INCHES U.O.S.
TOLERANCES UNLESS OTHERWISE SPECIFIED:

.X = ±	.12	ANGLES	±2°
.XX = ±	.06	FRACTIONS	±1/32
.XXX= ±	.031		

REMOVE BURRS AND BREAK EDGES .005

DO NOT SCALE THIS PRINT

DRAWN BY: MJP	SHEET: 1 of 1	PART NUMBER: 760239946xx25xS
CHECKED BY:	SCALE:	DESCRIPTION: METRO CELL, 18 IN INTEGRATED POLE SOLUTION
DATE:	MATERIAL:	DRAWING TYPE:
REVISION: B	FINISH:	ANDREW, an Amphenol company
	WEIGHT:	

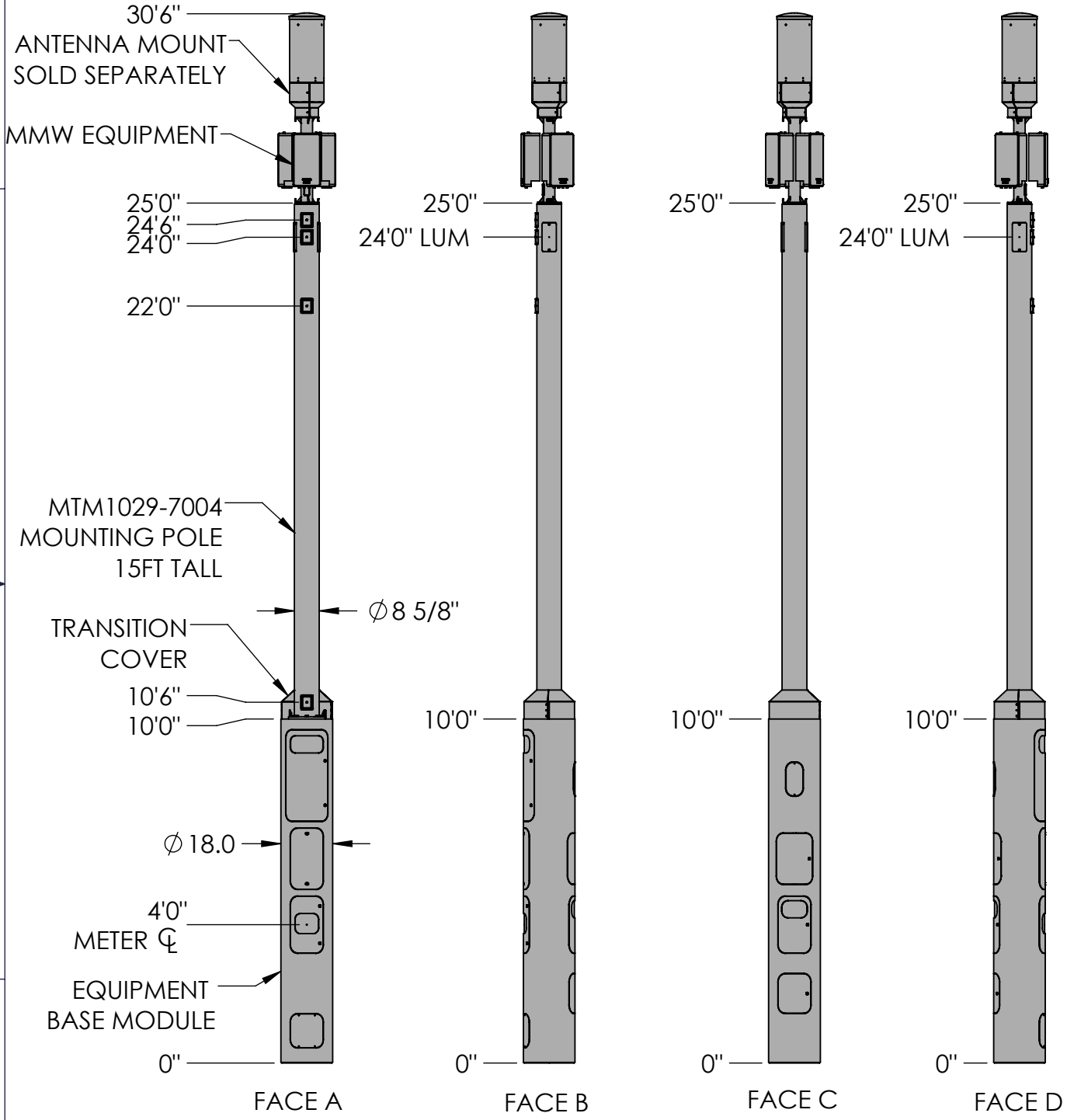

These drawings and specifications are the proprietary property of CommScope Inc. and may be used only for the specific purpose authorized in writing by CommScope Inc.

ALL DIMENSIONS ARE IN INCHES U.O.S.
TOLERANCES UNLESS OTHERWISE SPECIFIED:

.X = ±	.12	ANGLES	±2°
.XX = ±	.06	FRACTIONS	±1/32
.XXX= ±	.031		

REMOVE BURRS AND BREAK EDGES .005

DO NOT SCALE THIS PRINT

DRAWN BY: MJP	SHEET: 1 of 1	PART NUMBER: 760239946xx25xS
CHECKED BY:	SCALE:	DESCRIPTION: METRO CELL, 18 IN INTEGRATED POLE SOLUTION
DATE:	MATERIAL:	DRAWING TYPE:
REVISION: B	FINISH:	ANDREW an Amphenol company
	WEIGHT:	

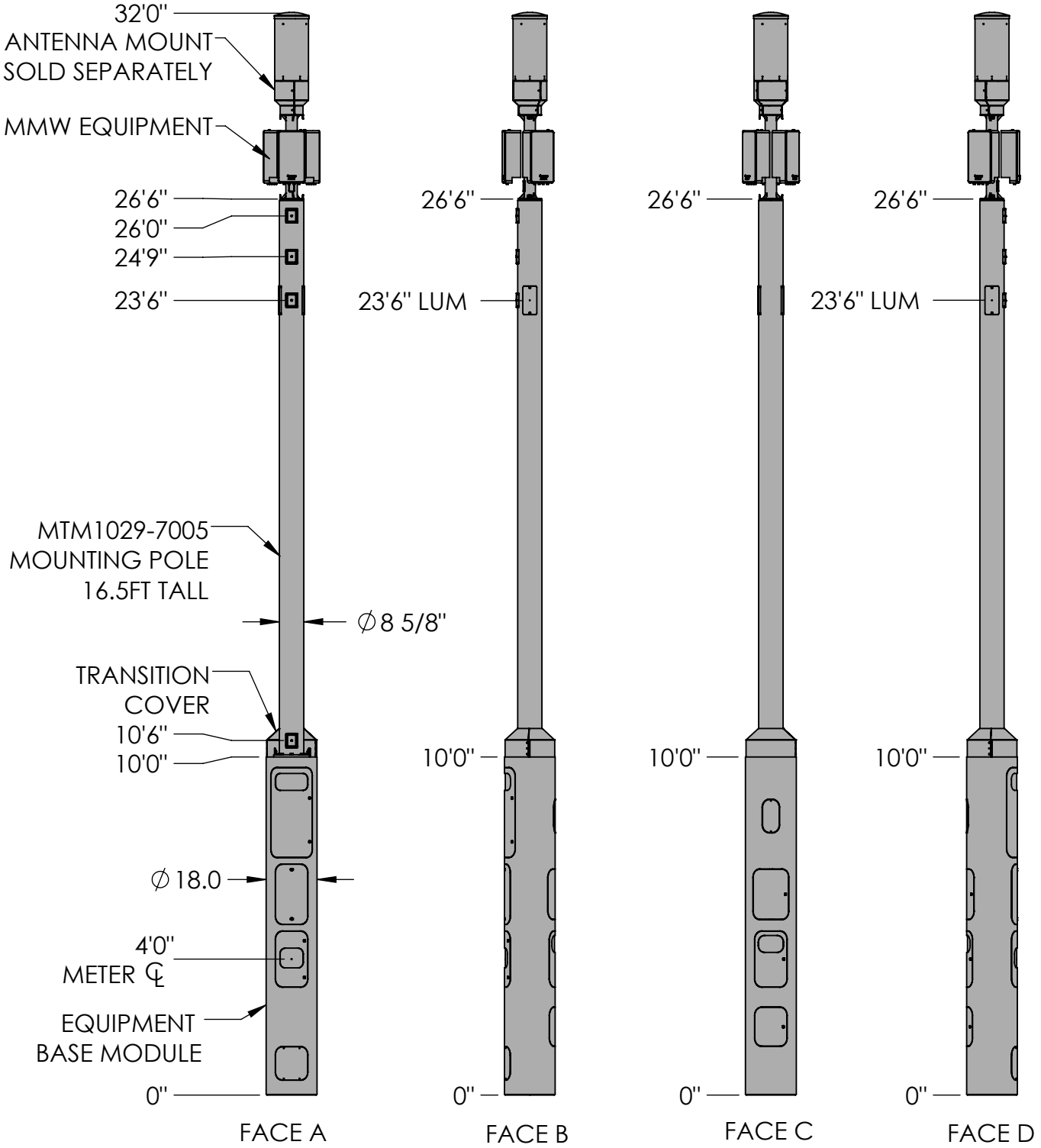

These drawings and specifications are the proprietary property of CommScope Inc. and may be used only for the specific purpose authorized in writing by CommScope Inc.

ALL DIMENSIONS ARE IN INCHES U.O.S.
TOLERANCES UNLESS OTHERWISE SPECIFIED:

.X = ±	.12	ANGLES	±2°
.XX = ±	.06	FRACTIONS	±1/32
.XXX= ±	.031		

REMOVE BURRS AND BREAK EDGES .005

DO NOT SCALE THIS PRINT

DRAWN BY: MJP	SHEET: 1 of 1	PART NUMBER: 760239946xx27xS
CHECKED BY:	SCALE:	DESCRIPTION: METRO CELL, 18 IN INTEGRATED POLE SOLUTION
DATE:	MATERIAL:	DRAWING TYPE:
REVISION: B	FINISH:	ANDREW. an Amphenol company
	WEIGHT:	

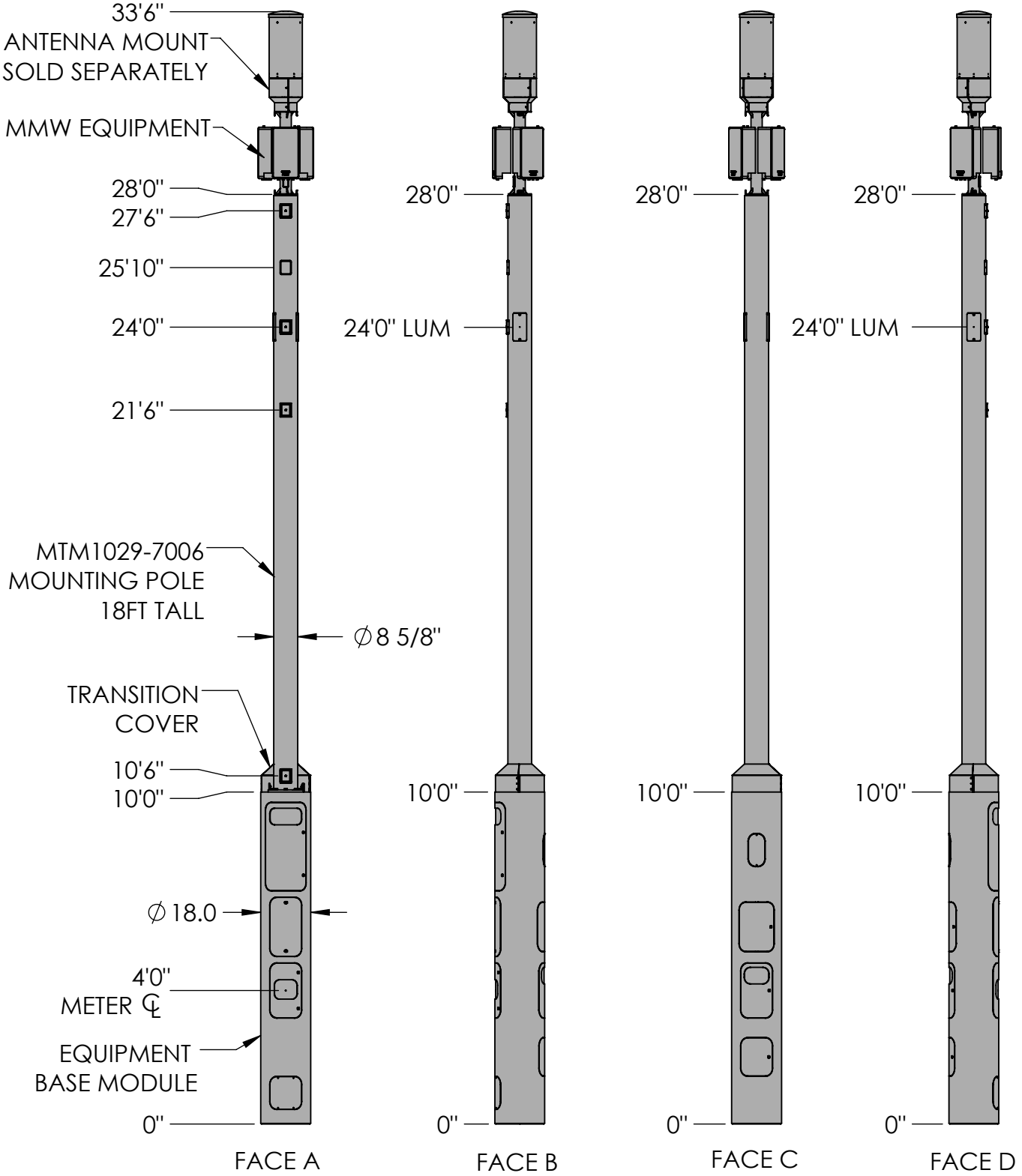

These drawings and specifications are the proprietary property of CommScope Inc. and may be used only for the specific purpose authorized in writing by CommScope Inc.

ALL DIMENSIONS ARE IN INCHES U.O.S.
TOLERANCES UNLESS OTHERWISE SPECIFIED:

.X = ±	.12	ANGLES	±2°
.XX = ±	.06	FRACTIONS	±1/32
.XXX= ±	.031		

REMOVE BURRS AND BREAK EDGES .005

DO NOT SCALE THIS PRINT

DRAWN BY: MJP	SHEET: 1 of 1	PART NUMBER: 760239946xx28xS
CHECKED BY:	SCALE:	DESCRIPTION: METRO CELL, 18 IN INTEGRATED POLE SOLUTION
DATE:	MATERIAL:	DRAWING TYPE:
REVISION: B	FINISH:	ANDREW. an Amphenol company
	WEIGHT:	

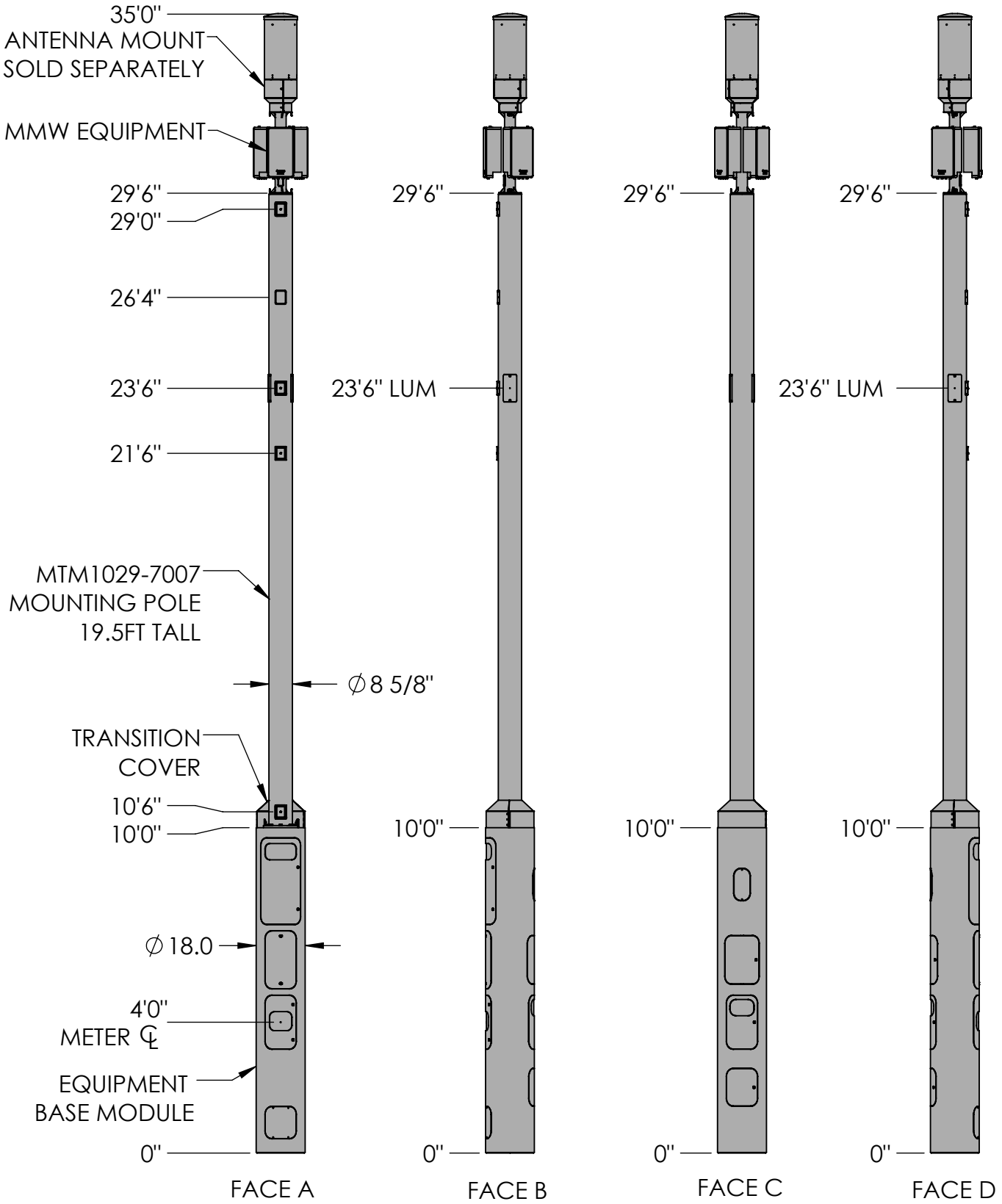

These drawings and specifications are the proprietary property of CommScope Inc. and may be used only for the specific purpose authorized in writing by CommScope Inc.

ALL DIMENSIONS ARE IN INCHES U.O.S.
TOLERANCES UNLESS OTHERWISE SPECIFIED:

.X = ±	.12	ANGLES	±2°
.XX = ±	.06	FRACTIONS	±1/32
.XXX= ±	.031		

REMOVE BURRS AND BREAK EDGES .005

DO NOT SCALE THIS PRINT

DRAWN BY: MJP	SHEET: 1 of 1	PART NUMBER: 760239946xx30xS
CHECKED BY:	SCALE:	DESCRIPTION: METRO CELL, 18 IN INTEGRATED POLE SOLUTION
DATE:	MATERIAL:	DRAWING TYPE:
REVISION: B	FINISH:	ANDREW, an Amphenol company
	WEIGHT:	

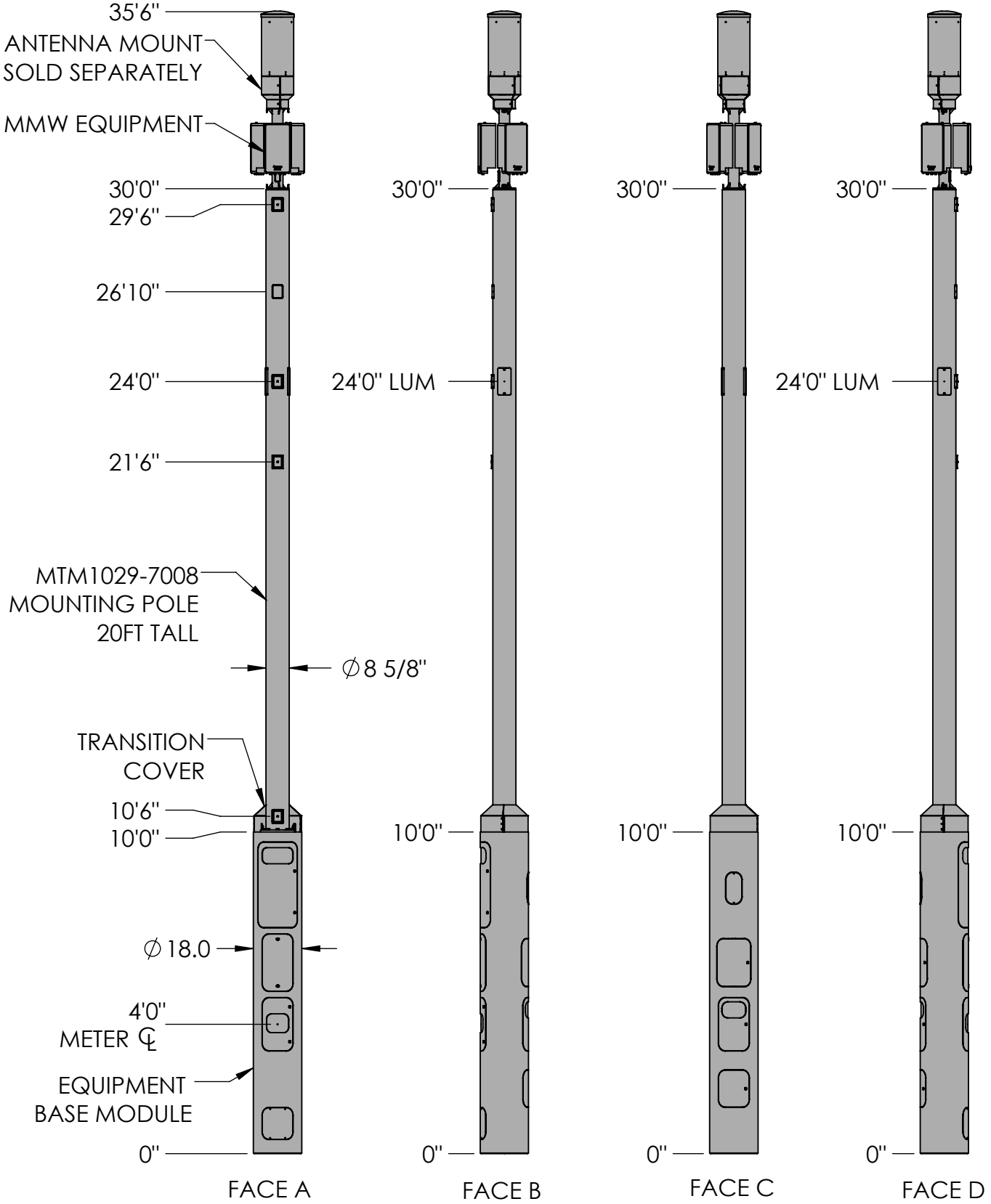

These drawings and specifications are the proprietary property of CommScope Inc. and may be used only for the specific purpose authorized in writing by CommScope Inc.

ALL DIMENSIONS ARE IN INCHES U.O.S.
TOLERANCES UNLESS OTHERWISE SPECIFIED:

.X = ±	.12	ANGLES	±2°
.XX = ±	.06	FRACTIONS	±1/32
.XXX= ±	.031		

REMOVE BURRS AND BREAK EDGES .005

DO NOT SCALE THIS PRINT

DRAWN BY: MJP	SHEET: 1 of 1	PART NUMBER: 760239946xx30xS
CHECKED BY:	SCALE:	DESCRIPTION: METRO CELL, 18 IN INTEGRATED POLE SOLUTION
DATE:	MATERIAL:	DRAWING TYPE:
REVISION: B	FINISH:	ANDREW an Amphenol company
	WEIGHT:	

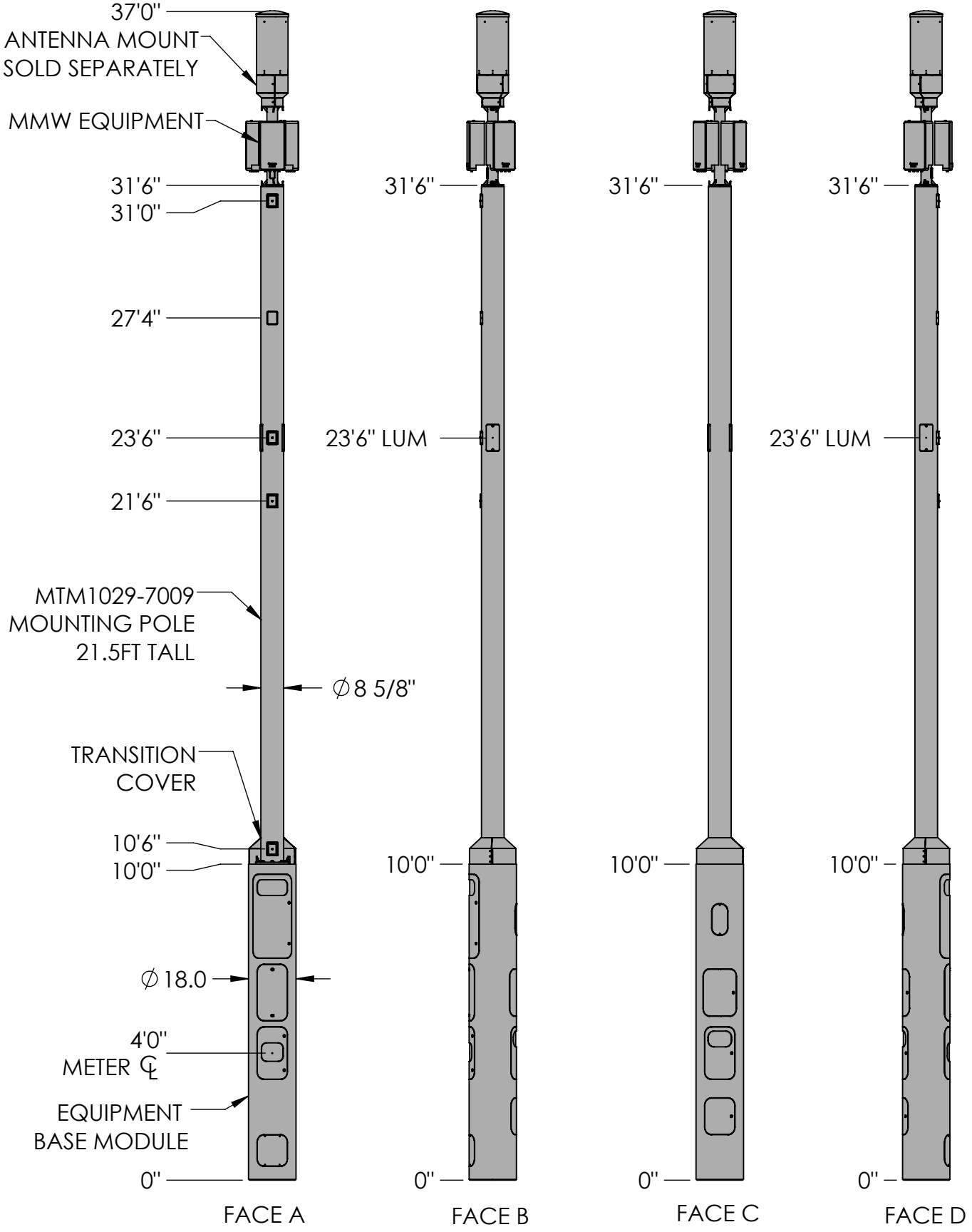

These drawings and specifications are the proprietary property of CommScope Inc. and may be used only for the specific purpose authorized in writing by CommScope Inc.

ALL DIMENSIONS ARE IN INCHES U.O.S.
TOLERANCES UNLESS OTHERWISE SPECIFIED:

.X = ±	.12	ANGLES	±2°
.XX = ±	.06	FRACTIONS	±1/32
.XXX= ±	.031		

REMOVE BURRS AND BREAK EDGES .005

DO NOT SCALE THIS PRINT

DRAWN BY: MJP	SHEET: 1 of 1	PART NUMBER: 760239946xx32xS
CHECKED BY:	SCALE:	DESCRIPTION: METRO CELL, 18 IN INTEGRATED POLE SOLUTION
DATE:	MATERIAL:	DRAWING TYPE:
REVISION: B	FINISH:	ANDREW an Amphenol company
	WEIGHT:	

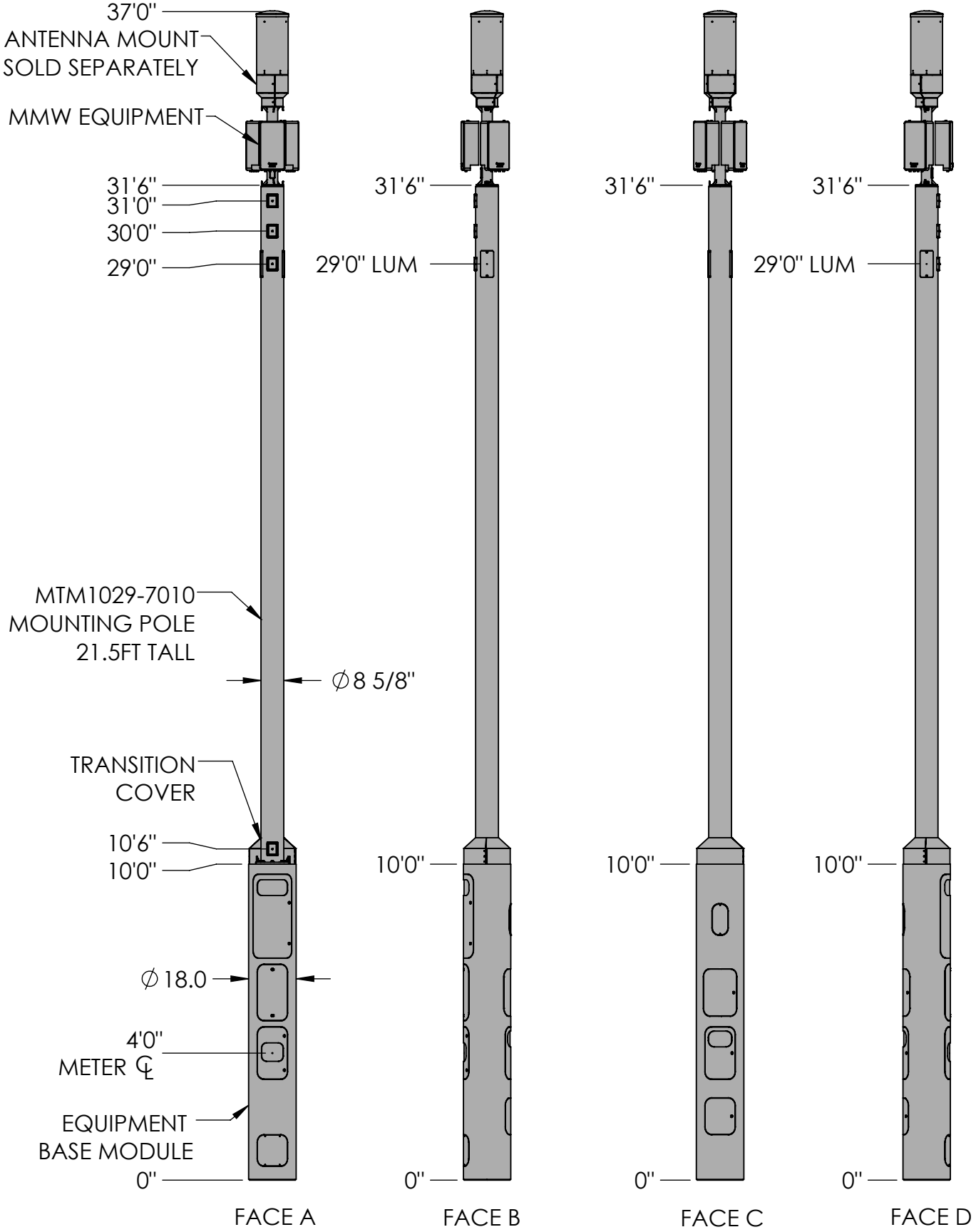

These drawings and specifications are the proprietary property of CommScope Inc. and may be used only for the specific purpose authorized in writing by CommScope Inc.

ALL DIMENSIONS ARE IN INCHES U.O.S.
TOLERANCES UNLESS OTHERWISE SPECIFIED:

.X = ±	.12	ANGLES	±2°
.XX = ±	.06	FRACTIONS	±1/32
.XXX= ±	.031		

REMOVE BURRS AND BREAK EDGES .005

DO NOT SCALE THIS PRINT

DRAWN BY: MJP	SHEET: 1 of 1	PART NUMBER: 760239946xx32xS
CHECKED BY:	SCALE:	DESCRIPTION: METRO CELL, 18 IN INTEGRATED POLE SOLUTION
DATE:	MATERIAL:	DRAWING TYPE:
REVISION: B	FINISH:	ANDREW. an Amphenol company
	WEIGHT:	

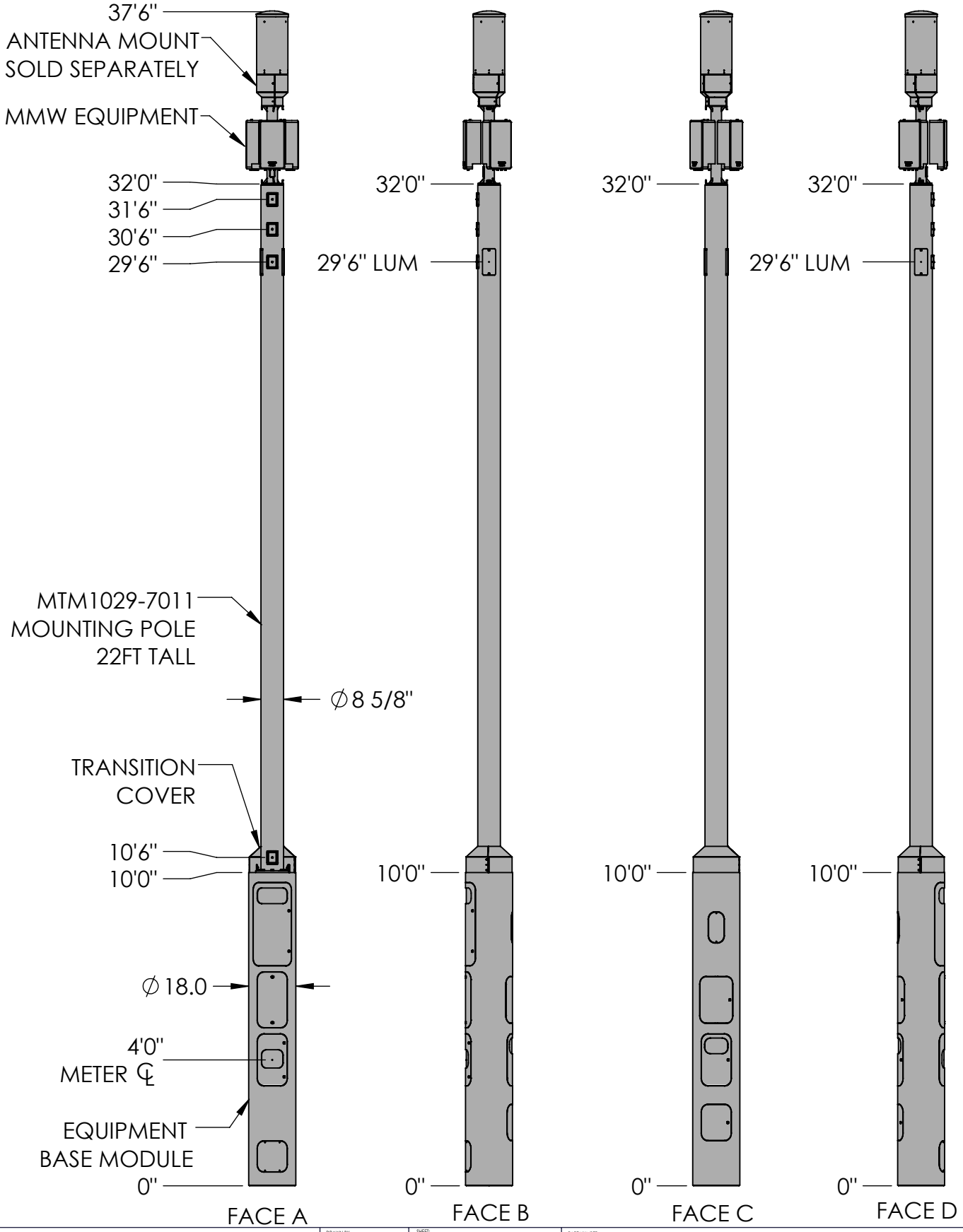

These drawings and specifications are the proprietary property of CommScope Inc. and may be used only for the specific purpose authorized in writing by CommScope Inc.

ALL DIMENSIONS ARE IN INCHES U.O.S.
TOLERANCES UNLESS OTHERWISE SPECIFIED:

.X = ±	.12	ANGLES	±2°
.XX = ±	.06	FRACTIONS	±1/32
.XXX= ±	.031		

REMOVE BURRS AND BREAK EDGES .005

DO NOT SCALE THIS PRINT

DRAWN BY: MJP	SHEET: 1 of 1	PART NUMBER: 760239946xx32xS
CHECKED BY:	SCALE:	DESCRIPTION: METRO CELL, 18 IN INTEGRATED POLE SOLUTION
DATE:	MATERIAL:	DRAWING TYPE:
REVISION: B	FINISH:	ANDREW an Amphenol company
	WEIGHT:	

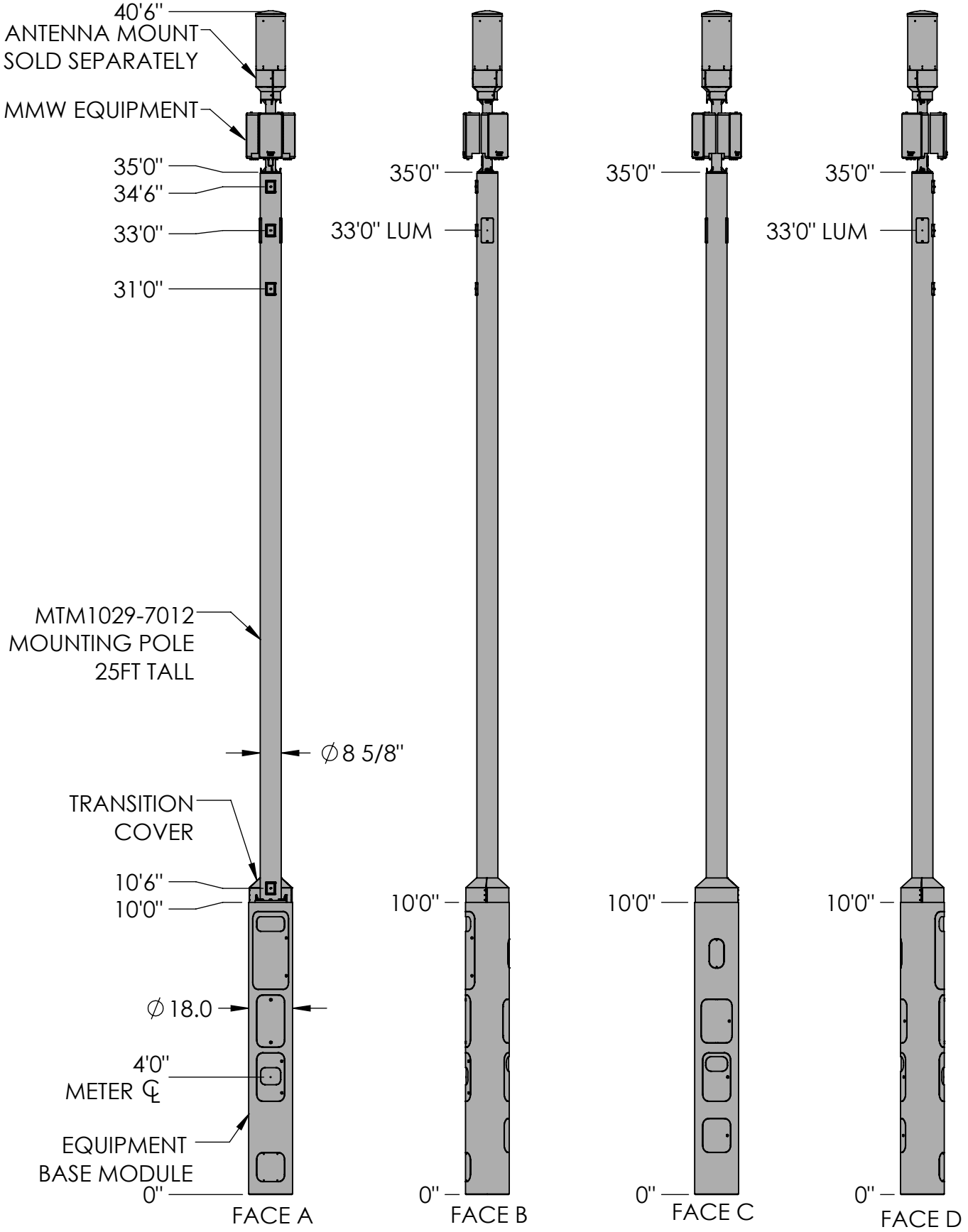

These drawings and specifications are the proprietary property of CommScope Inc. and may be used only for the specific purpose authorized in writing by CommScope Inc.

ALL DIMENSIONS ARE IN INCHES U.O.S.
TOLERANCES UNLESS OTHERWISE SPECIFIED:

.X = ±	.12	ANGLES	±2°
.XX = ±	.06	FRACTIONS	±1/32
.XXX= ±	.031		

REMOVE BURRS AND BREAK EDGES .005

DO NOT SCALE THIS PRINT

DRAWN BY: MJP	SHEET: 1 of 1	PART NUMBER: 760239946xx35xS	
CHECKED BY:	SCALE:	DESCRIPTION: METRO CELL, 18 IN INTEGRATED POLE SOLUTION	
DATE:	MATERIAL:	DRAWING TYPE:	
REVISION: B	FINISH:	ANDREW, an Amphenol company	
	WEIGHT:		

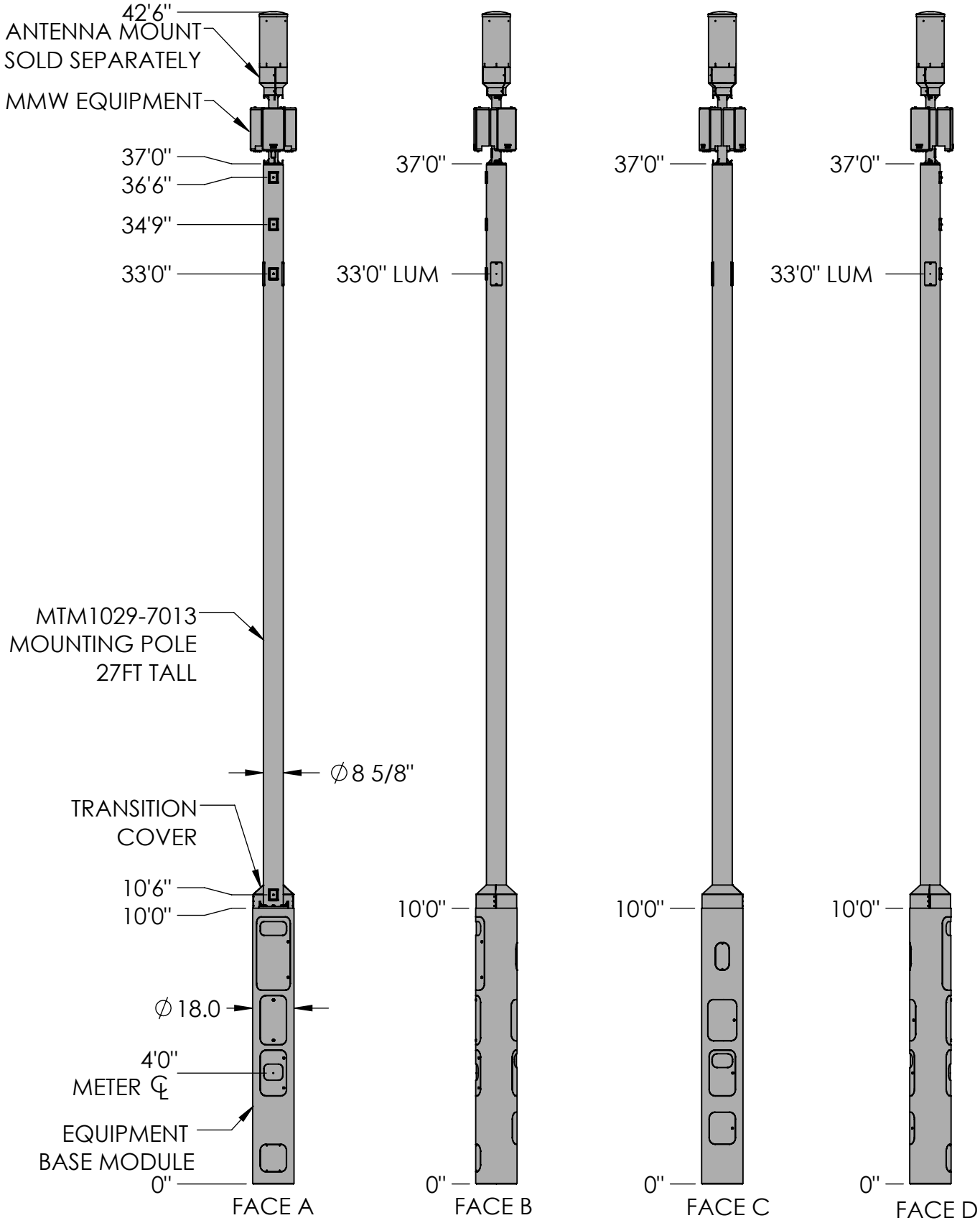

These drawings and specifications are the proprietary property of CommScope Inc. and may be used only for the specific purpose authorized in writing by CommScope Inc.

ALL DIMENSIONS ARE IN INCHES U.O.S.
TOLERANCES UNLESS OTHERWISE SPECIFIED:

.X = ±	.12	ANGLES	±2°
.XX = ±	.06	FRACTIONS	±1/32
.XXX= ±	.031		

REMOVE BURRS AND BREAK EDGES .005

DO NOT SCALE THIS PRINT

DRAWN BY: MJP	SHEET: 1 of 1	PART NUMBER: 760239946xx37xS
CHECKED BY:	SCALE:	DESCRIPTION: METRO CELL, 18 IN INTEGRATED POLE SOLUTION
DATE:	MATERIAL:	DRAWING TYPE:
REVISION: B	FINISH:	ANDREW, an Amphenol company
	WEIGHT:	

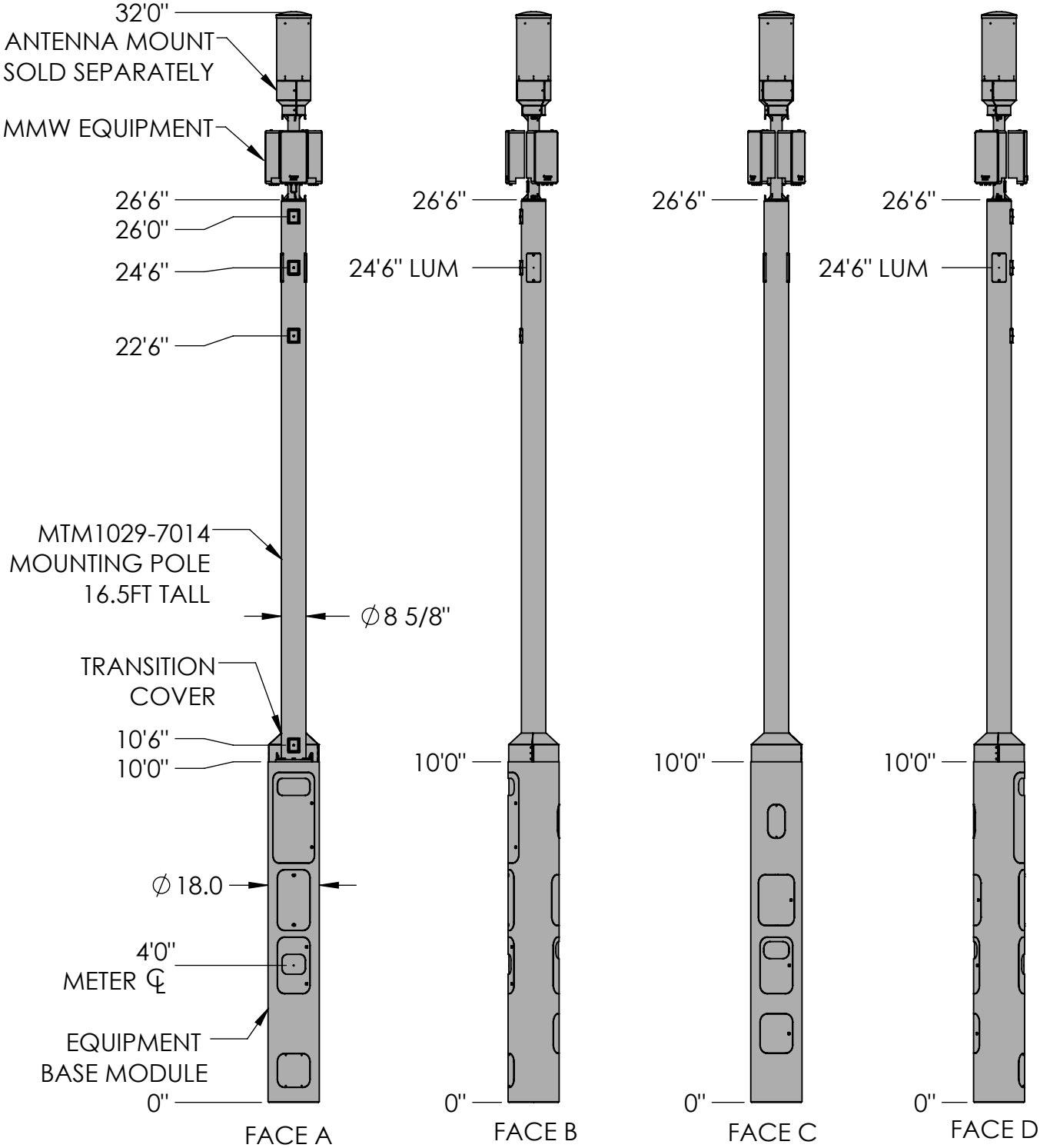

These drawings and specifications are the proprietary property of CommScope Inc. and may be used only for the specific purpose authorized in writing by CommScope Inc.

ALL DIMENSIONS ARE IN INCHES U.O.S.
TOLERANCES UNLESS OTHERWISE SPECIFIED:

.X = ±	.12	ANGLES	±2°
.XX = ±	.06	FRACTIONS	±1/32
.XXX= ±	.031		

REMOVE BURRS AND BREAK EDGES .005

DO NOT SCALE THIS PRINT

DRAWN BY: MJP	SHEET: 1 of 1	PART NUMBER: 760239946xx27xS
CHECKED BY:	SCALE:	DESCRIPTION: METRO CELL, 18 IN INTEGRATED POLE SOLUTION
DATE:	MATERIAL:	DRAWING TYPE:
REVISION: B	FINISH:	ANDREW an Amphenol company
	WEIGHT:	

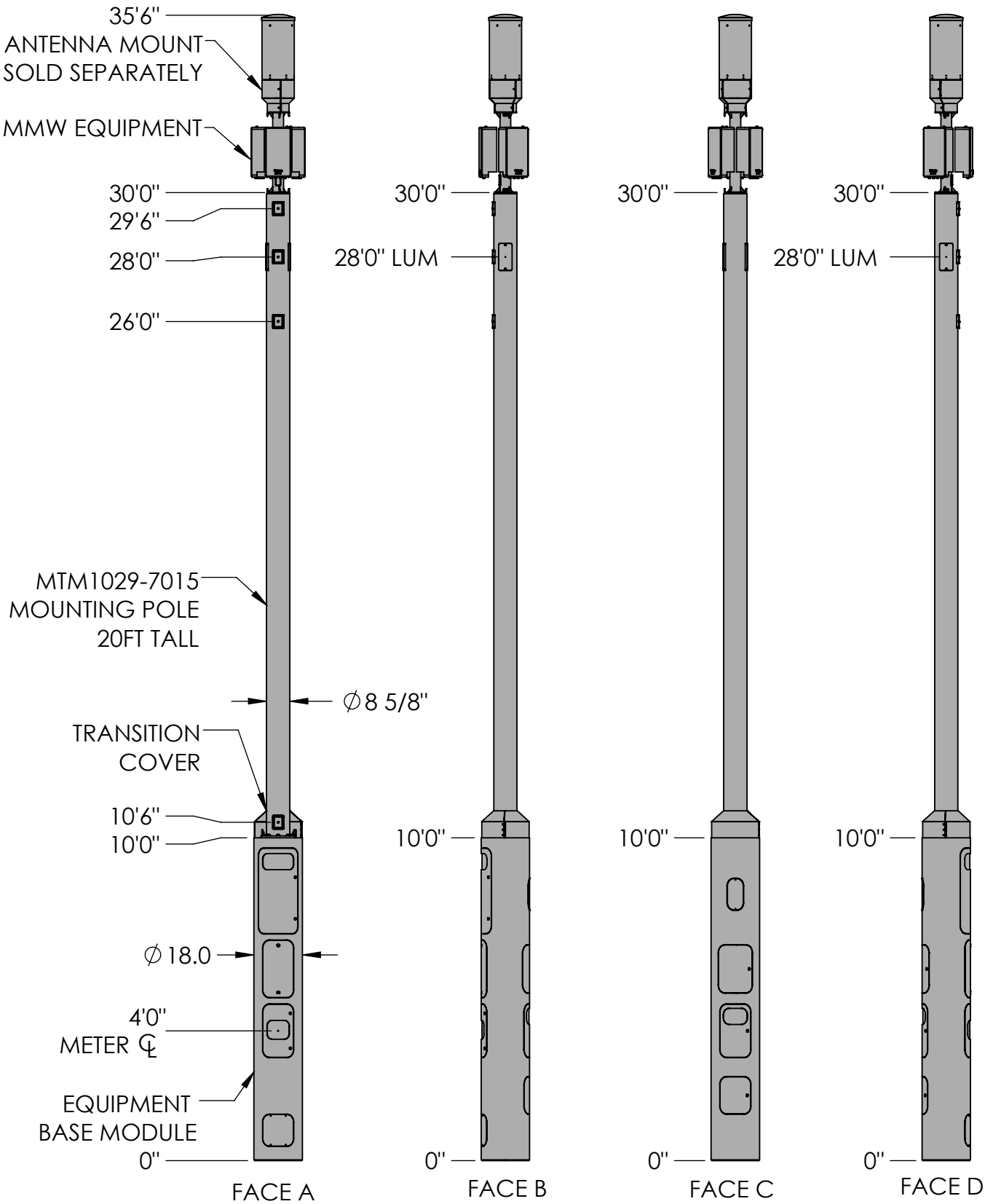

These drawings and specifications are the proprietary property of CommScope Inc. and may be used only for the specific purpose authorized in writing by CommScope Inc.

ALL DIMENSIONS ARE IN INCHES U.O.S.
TOLERANCES UNLESS OTHERWISE SPECIFIED:

.X = ±	.12	ANGLES	±2°
.XX = ±	.06	FRACTIONS	±1/32
.XXX= ±	.031		

REMOVE BURRS AND BREAK EDGES .005

DO NOT SCALE THIS PRINT

DRAWN BY: MJP	SHEET: 1 of 1	PART NUMBER: 760239946xx30xS
CHECKED BY:	SCALE:	DESCRIPTION: METRO CELL, 18 IN INTEGRATED POLE SOLUTION
DATE:	MATERIAL:	DRAWING TYPE:
REVISION: B	FINISH:	ANDREW an Amphenol company
	WEIGHT:	

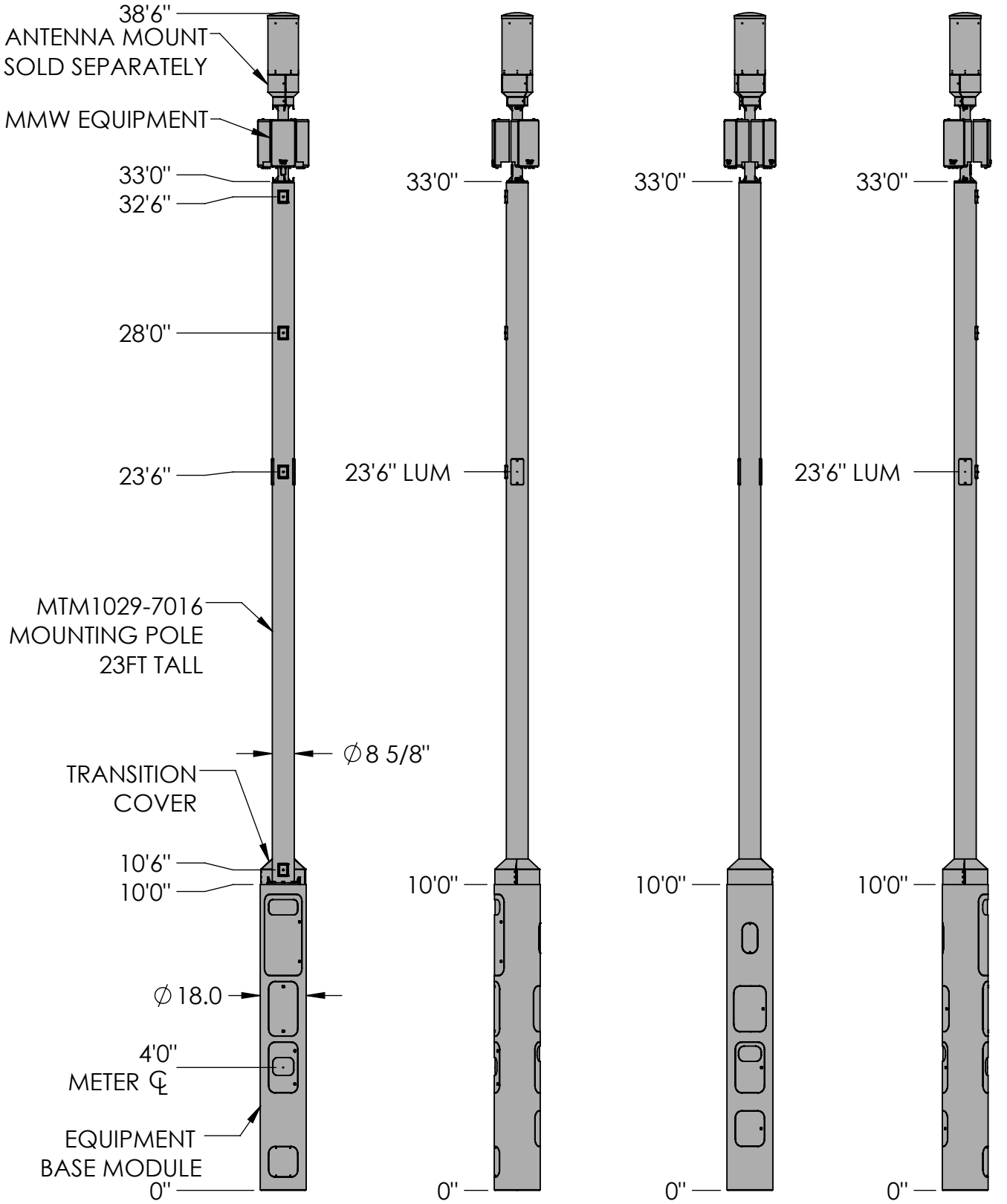

These drawings and specifications are the proprietary property of CommScope Inc. and may be used only for the specific purpose authorized in writing by CommScope Inc.

ALL DIMENSIONS ARE IN INCHES U.O.S.
TOLERANCES UNLESS OTHERWISE SPECIFIED:

.X = ±	.12	ANGLES	±2°
.XX = ±	.06	FRACTIONS	±1/32
.XXX= ±	.031		

REMOVE BURRS AND BREAK EDGES .005

DO NOT SCALE THIS PRINT

DRAWN BY: MJP	SHEET: 1 of 1	PART NUMBER: 760239946xx33xS
CHECKED BY:	SCALE:	DESCRIPTION: METRO CELL, 18 IN INTEGRATED POLE SOLUTION
DATE:	MATERIAL:	DRAWING TYPE:
REVISION: B	FINISH:	ANDREW an Amphenol company
	WEIGHT:	

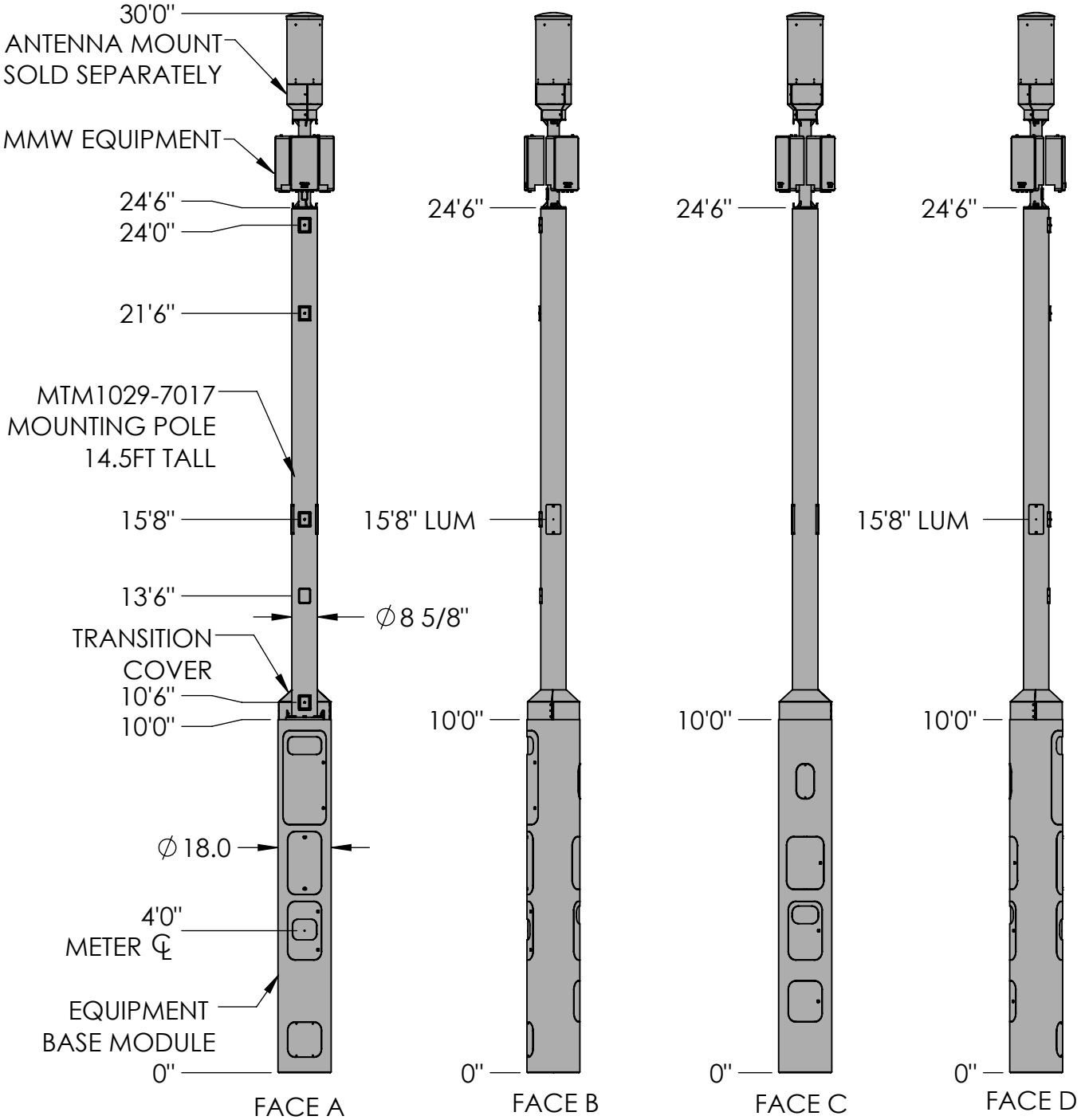

These drawings and specifications are the proprietary property of CommScope Inc. and may be used only for the specific purpose authorized in writing by CommScope Inc.

ALL DIMENSIONS ARE IN INCHES U.O.S.
TOLERANCES UNLESS OTHERWISE SPECIFIED:

.X = ±	.12	ANGLES	±2°
.XX = ±	.06	FRACTIONS	±1/32
.XXX= ±	.031		

REMOVE BURRS AND BREAK EDGES .005

DO NOT SCALE THIS PRINT

DRAWN BY: MJP	SHEET: 1 of 1	PART NUMBER: 760239946xx25xS
CHECKED BY:	SCALE:	DESCRIPTION: METRO CELL, 18 IN INTEGRATED POLE SOLUTION
DATE:	MATERIAL:	DRAWING TYPE:
REVISION: B	FINISH:	ANDREW an Amphenol company
	WEIGHT:	

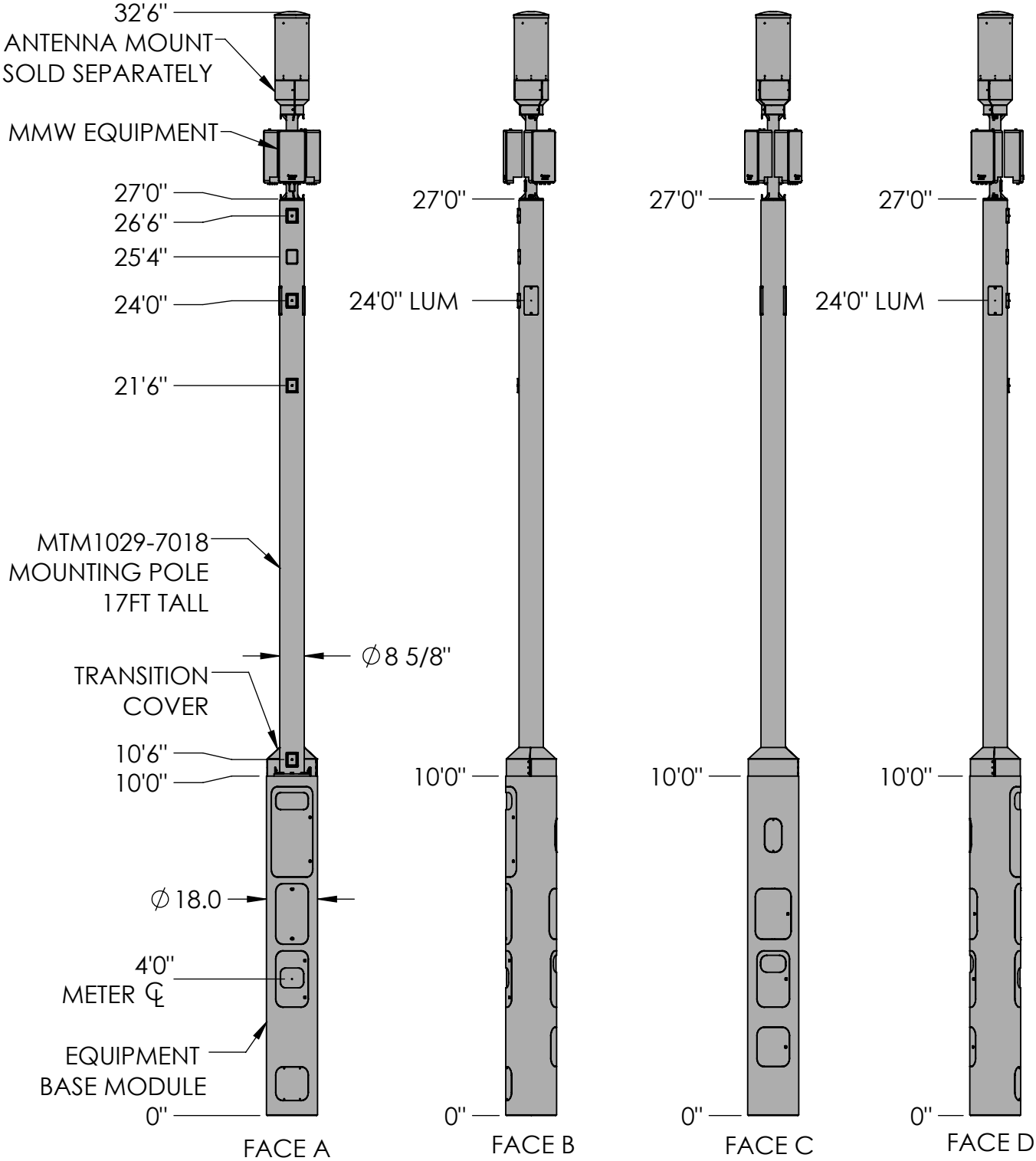

These drawings and specifications are the proprietary property of CommScope Inc. and may be used only for the specific purpose authorized in writing by CommScope Inc.

ALL DIMENSIONS ARE IN INCHES U.O.S.
TOLERANCES UNLESS OTHERWISE SPECIFIED:

.X = ±	.12	ANGLES	±2°
.XX = ±	.06	FRACTIONS	±1/32
.XXX= ±	.031		

REMOVE BURRS AND BREAK EDGES .005

DO NOT SCALE THIS PRINT

DRAWN BY: MJP	SHEET: 1 of 1	PART NUMBER: 760239946xx27xS
CHECKED BY:	SCALE:	DESCRIPTION: METRO CELL, 18 IN INTEGRATED POLE SOLUTION
DATE:	MATERIAL:	DRAWING TYPE:
REVISION: B	FINISH:	ANDREW an Amphenol company
	WEIGHT:	

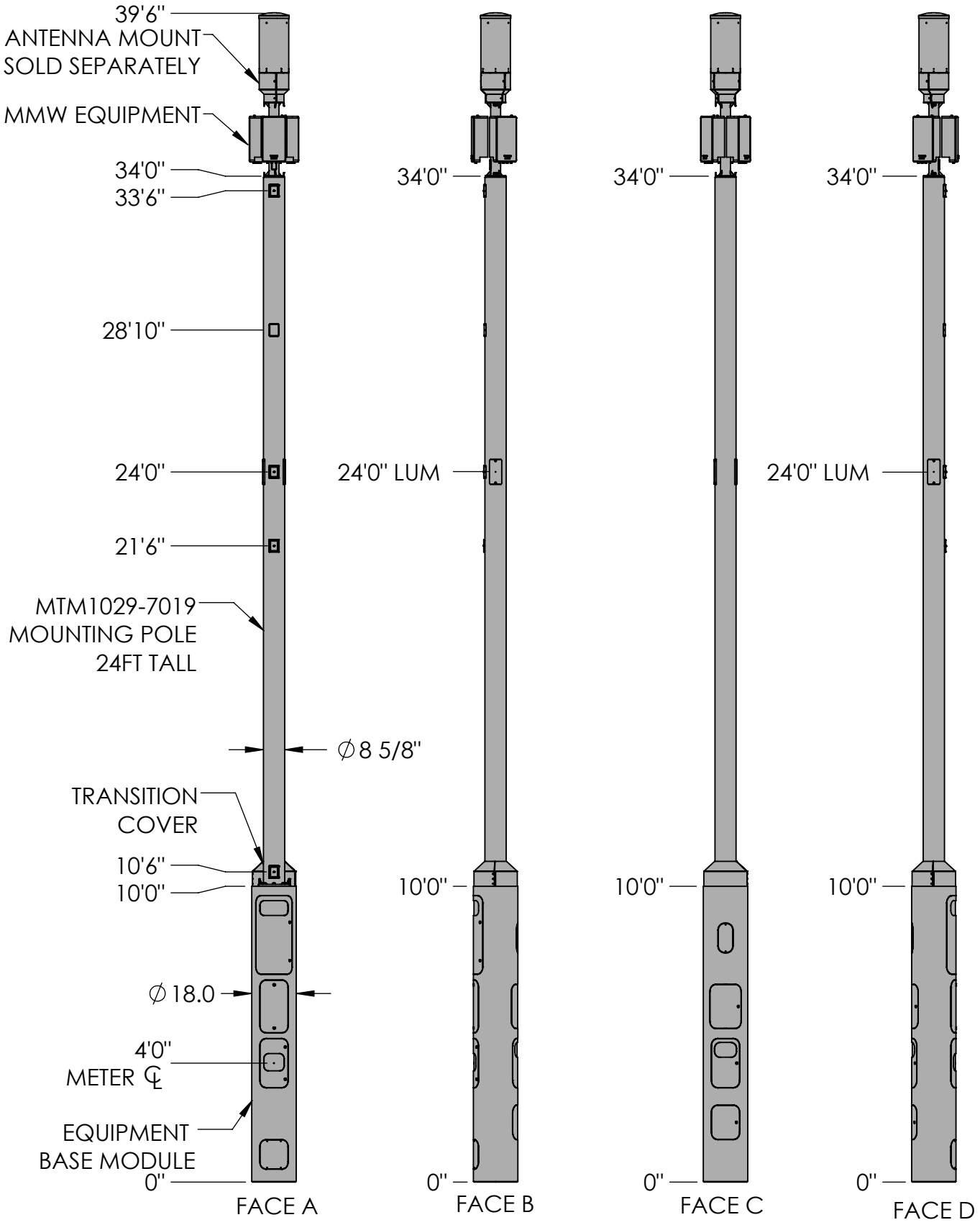

These drawings and specifications are the proprietary property of CommScope Inc. and may be used only for the specific purpose authorized in writing by CommScope Inc.

ALL DIMENSIONS ARE IN INCHES U.O.S.
TOLERANCES UNLESS OTHERWISE SPECIFIED:

.X = ±	.12	ANGLES	±2°
.XX = ±	.06	FRACTIONS	±1/32
.XXX= ±	.031		

REMOVE BURRS AND BREAK EDGES .005

DO NOT SCALE THIS PRINT

DRAWN BY: MJP	SHEET: 1 of 1	PART NUMBER: 760239946xx34xS
CHECKED BY:	SCALE:	DESCRIPTION: METRO CELL, 18 IN INTEGRATED POLE SOLUTION
DATE:	MATERIAL:	DRAWING TYPE:
REVISION: B	FINISH:	ANDREW an Amphenol company
	WEIGHT:	

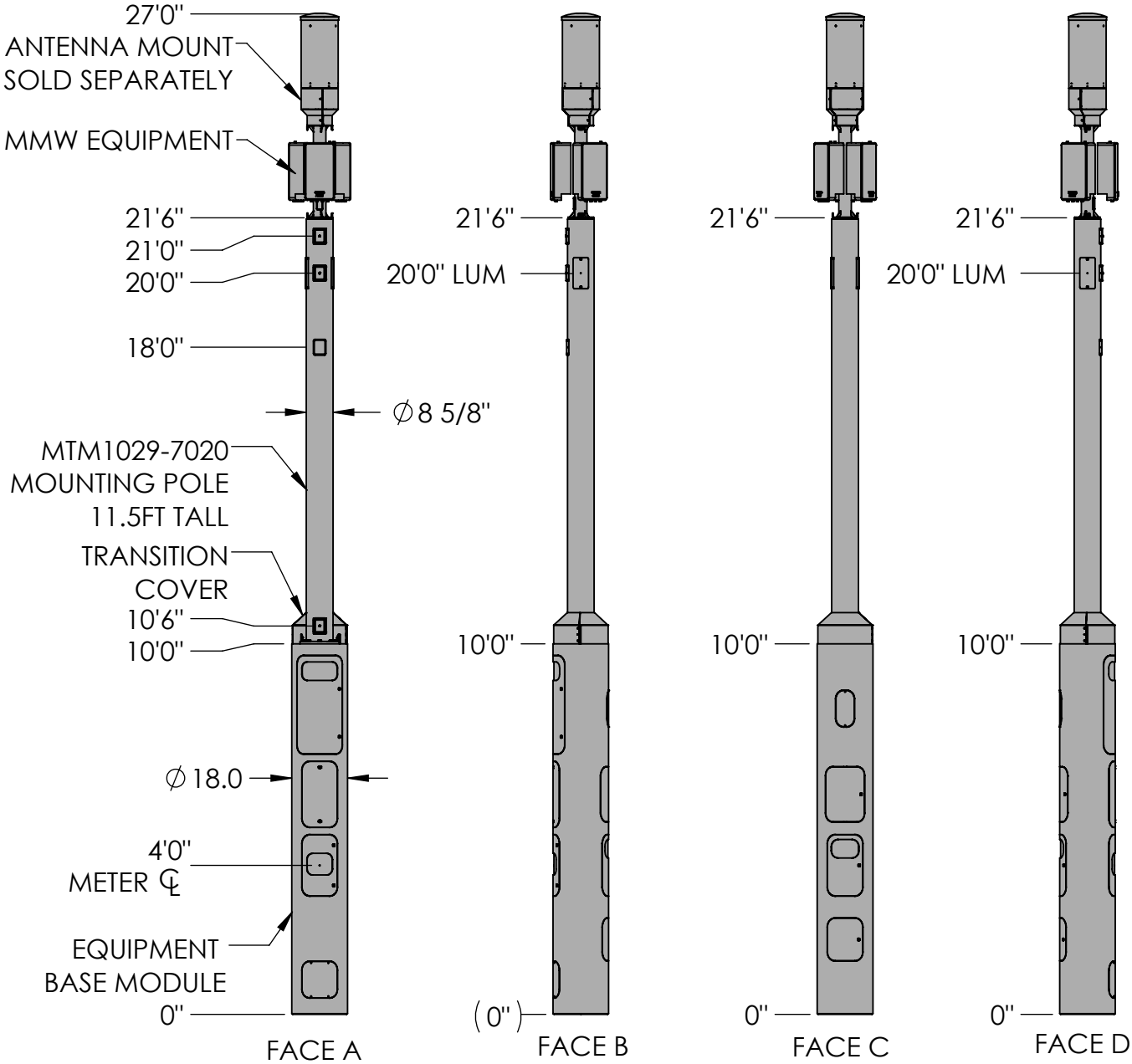

These drawings and specifications are the proprietary property of CommScope Inc. and may be used only for the specific purpose authorized in writing by CommScope Inc.

ALL DIMENSIONS ARE IN INCHES U.O.S.
TOLERANCES UNLESS OTHERWISE SPECIFIED:

.X = ±	.12	ANGLES	±2°
.XX = ±	.06	FRACTIONS	±1/32
.XXX= ±	.031		

REMOVE BURRS AND BREAK EDGES .005

DO NOT SCALE THIS PRINT

DRAWN BY: MJP	SHEET: 1 of 1	PART NUMBER: 760239946xx22xS
CHECKED BY:	SCALE:	DESCRIPTION: METRO CELL, 18 IN INTEGRATED POLE SOLUTION
DATE:	MATERIAL:	DRAWING TYPE:
REVISION: B	FINISH:	ANDREW an Amphenol company
	WEIGHT:	

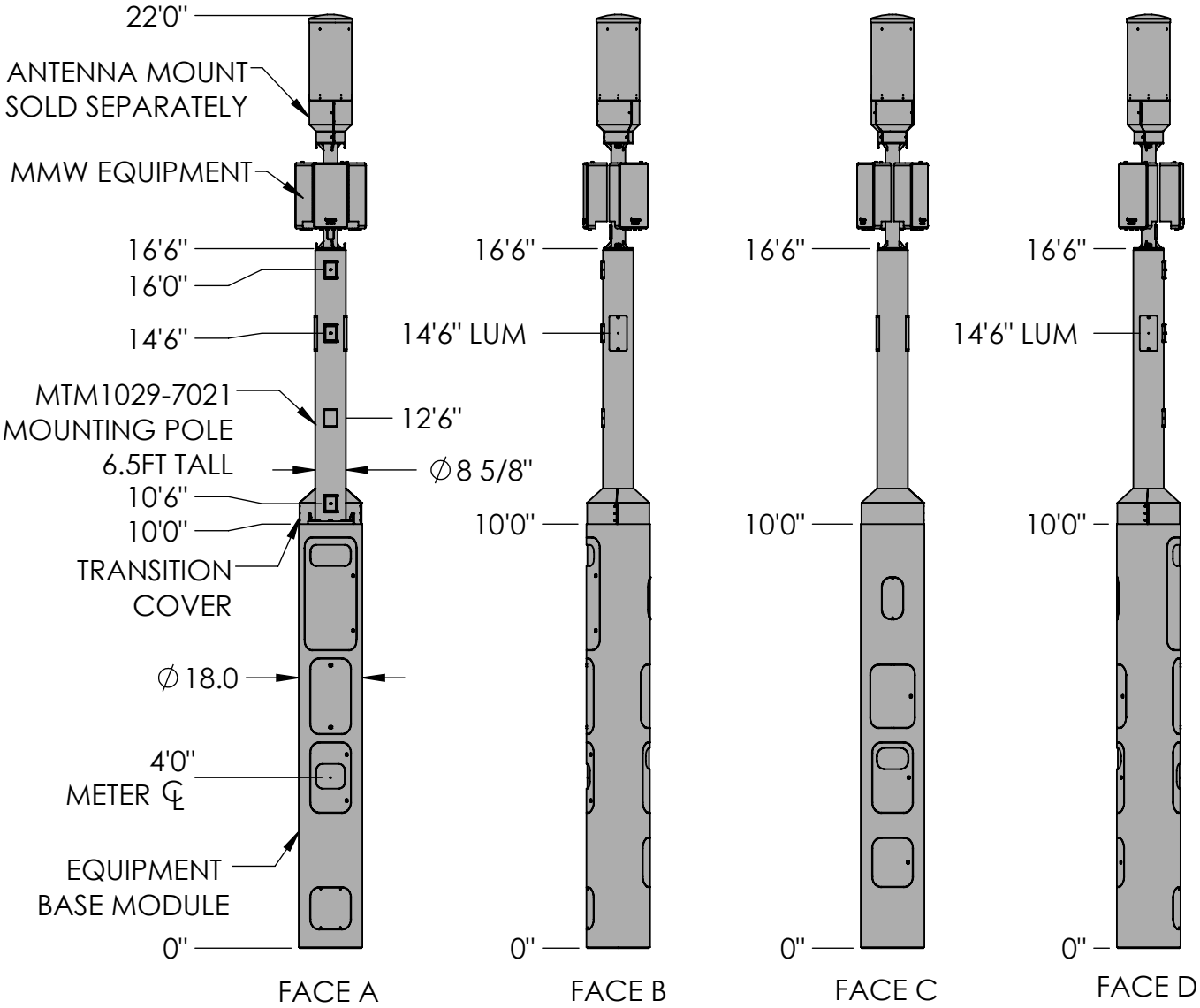

These drawings and specifications are the proprietary property of CommScope Inc. and may be used only for the specific purpose authorized in writing by CommScope Inc.

ALL DIMENSIONS ARE IN INCHES U.O.S.
TOLERANCES UNLESS OTHERWISE SPECIFIED:

.X = ±	.12	ANGLES	±2°
.XX = ±	.06	FRACTIONS	±1/32
.XXX= ±	.031		

REMOVE BURRS AND BREAK EDGES .005

DO NOT SCALE THIS PRINT

DRAWN BY: MJP	SHEET: 1 of 1	PART NUMBER: 760239946xx17xS
CHECKED BY:	SCALE:	DESCRIPTION: METRO CELL, 18 IN INTEGRATED POLE SOLUTION
DATE:	MATERIAL:	DRAWING TYPE:
REVISION: B	FINISH:	ANDREW an Amphenol company
	WEIGHT:	

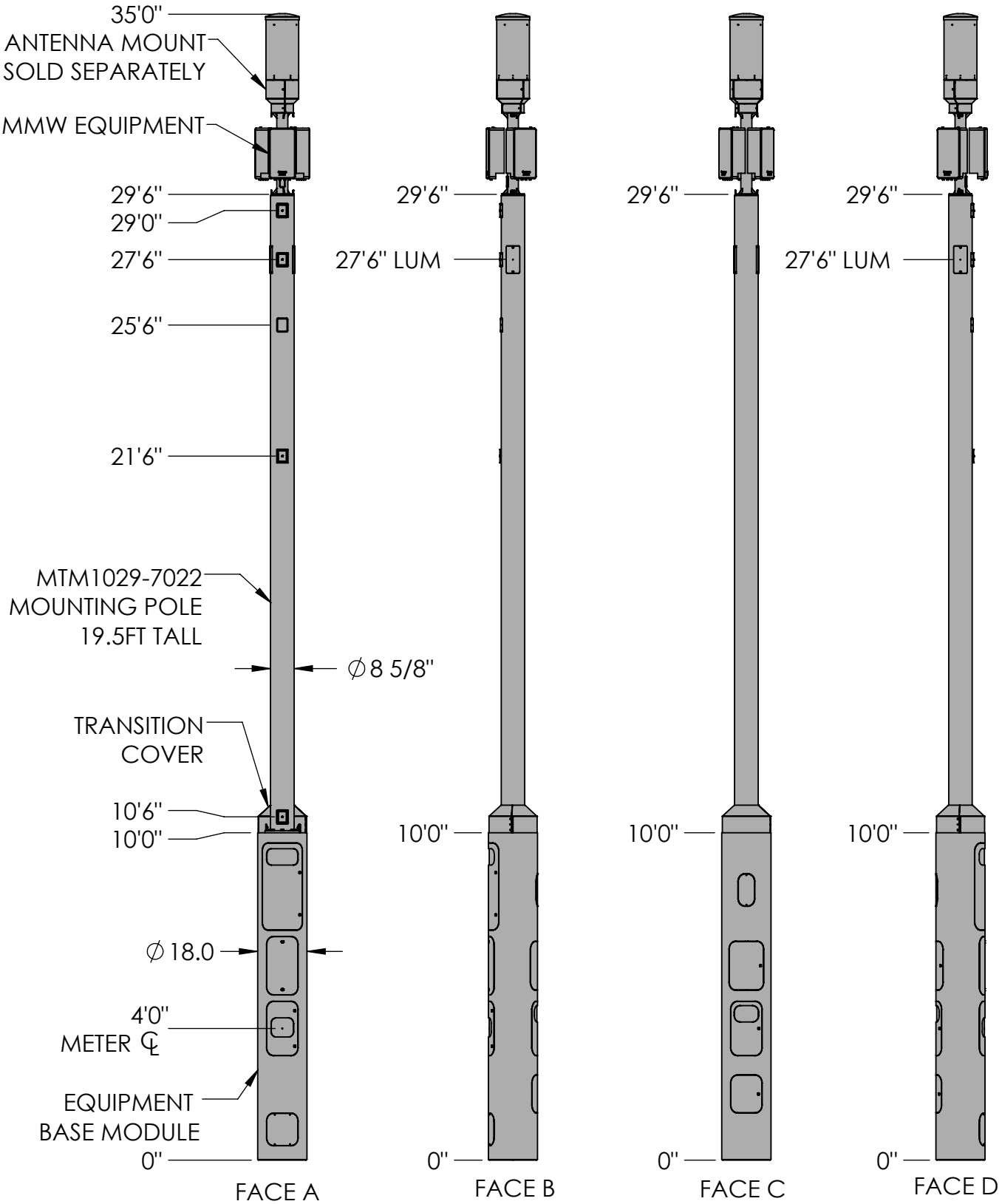

These drawings and specifications are the proprietary property of CommScope Inc. and may be used only for the specific purpose authorized in writing by CommScope Inc.

ALL DIMENSIONS ARE IN INCHES U.O.S.
TOLERANCES UNLESS OTHERWISE SPECIFIED:

.X = ±	.12	ANGLES	±2°
.XX = ±	.06	FRACTIONS	±1/32
.XXX= ±	.031		

REMOVE BURRS AND BREAK EDGES .005

DO NOT SCALE THIS PRINT

DRAWN BY: MJP	SHEET: 1 of 1	PART NUMBER: 760239946xx30xS
CHECKED BY:	SCALE:	DESCRIPTION: METRO CELL, 18 IN INTEGRATED POLE SOLUTION
DATE:	MATERIAL:	DRAWING TYPE:
REVISION: B	FINISH:	ANDREW an Amphenol company
	WEIGHT:	

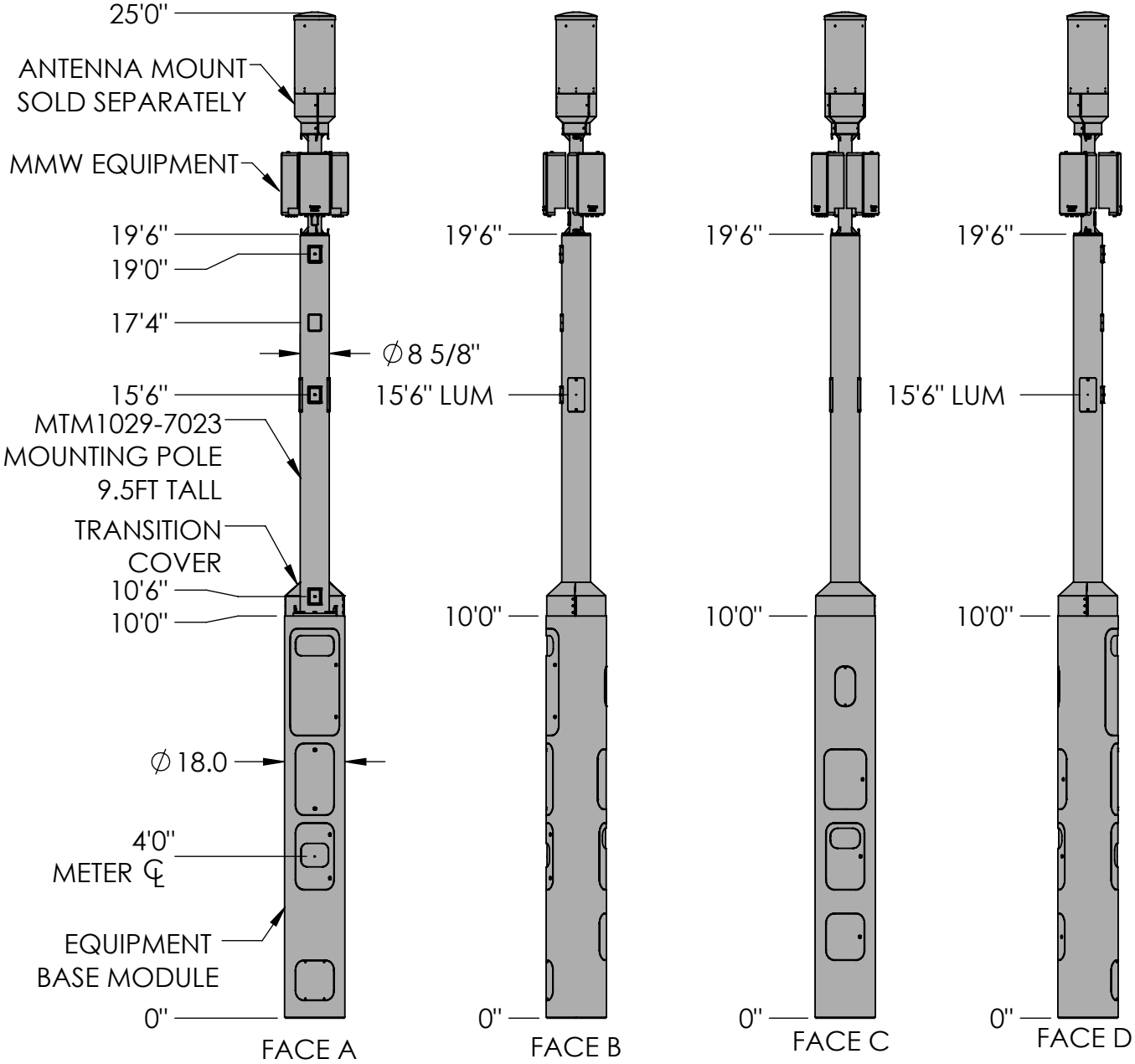

These drawings and specifications are the proprietary property of CommScope Inc. and may be used only for the specific purpose authorized in writing by CommScope Inc.

ALL DIMENSIONS ARE IN INCHES U.O.S.
TOLERANCES UNLESS OTHERWISE SPECIFIED:

.X = ±	.12	ANGLES	±2°
.XX = ±	.06	FRACTIONS	±1/32
.XXX= ±	.031		

REMOVE BURRS AND BREAK EDGES .005

DO NOT SCALE THIS PRINT

DRAWN BY: MJP	SHEET: 1 of 1	PART NUMBER: 760239946xx20xS
CHECKED BY:	SCALE:	DESCRIPTION: METRO CELL, 18 IN INTEGRATED POLE SOLUTION
DATE:	MATERIAL:	DRAWING TYPE:
REVISION: B	FINISH:	ANDREW an Amphenol company
	WEIGHT:	

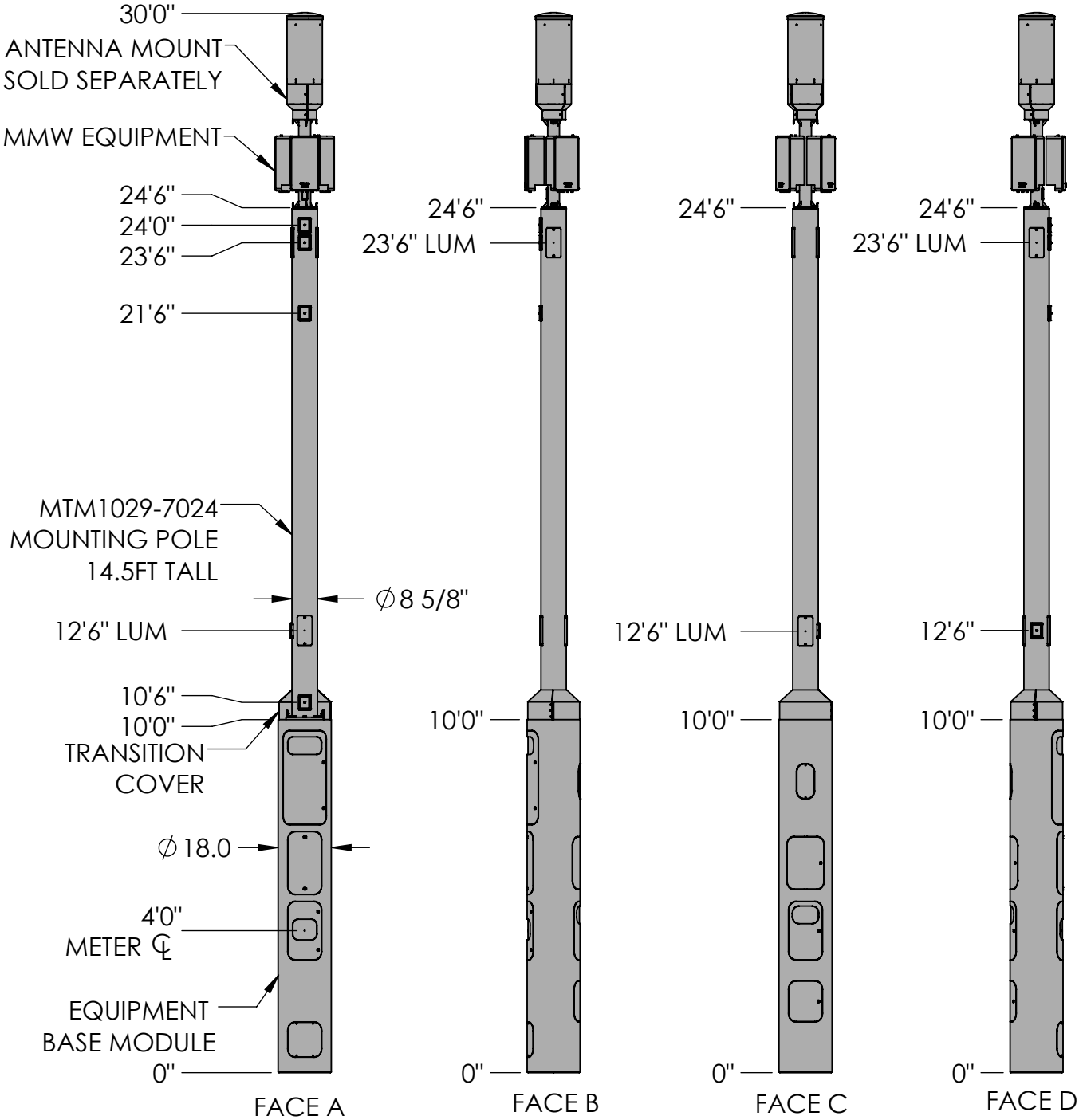

These drawings and specifications are the proprietary property of CommScope Inc. and may be used only for the specific purpose authorized in writing by CommScope Inc.

ALL DIMENSIONS ARE IN INCHES U.O.S.
TOLERANCES UNLESS OTHERWISE SPECIFIED:

.X = ±	.12	ANGLES	±2°
.XX = ±	.06	FRACTIONS	±1/32
.XXX= ±	.031		

REMOVE BURRS AND BREAK EDGES .005

DO NOT SCALE THIS PRINT

DRAWN BY: MJP	SHEET: 1 of 1	PART NUMBER: 760239946xx25xS
CHECKED BY:	SCALE:	DESCRIPTION: METRO CELL, 18 IN INTEGRATED POLE SOLUTION
DATE:	MATERIAL:	DRAWING TYPE:
REVISION: B	FINISH:	ANDREW an Amphenol company
	WEIGHT:	