REVISIONS			
REV.	DESCRIPTION	BY	DATE
B	UPDATED FORMAT	MJP	09/23/26

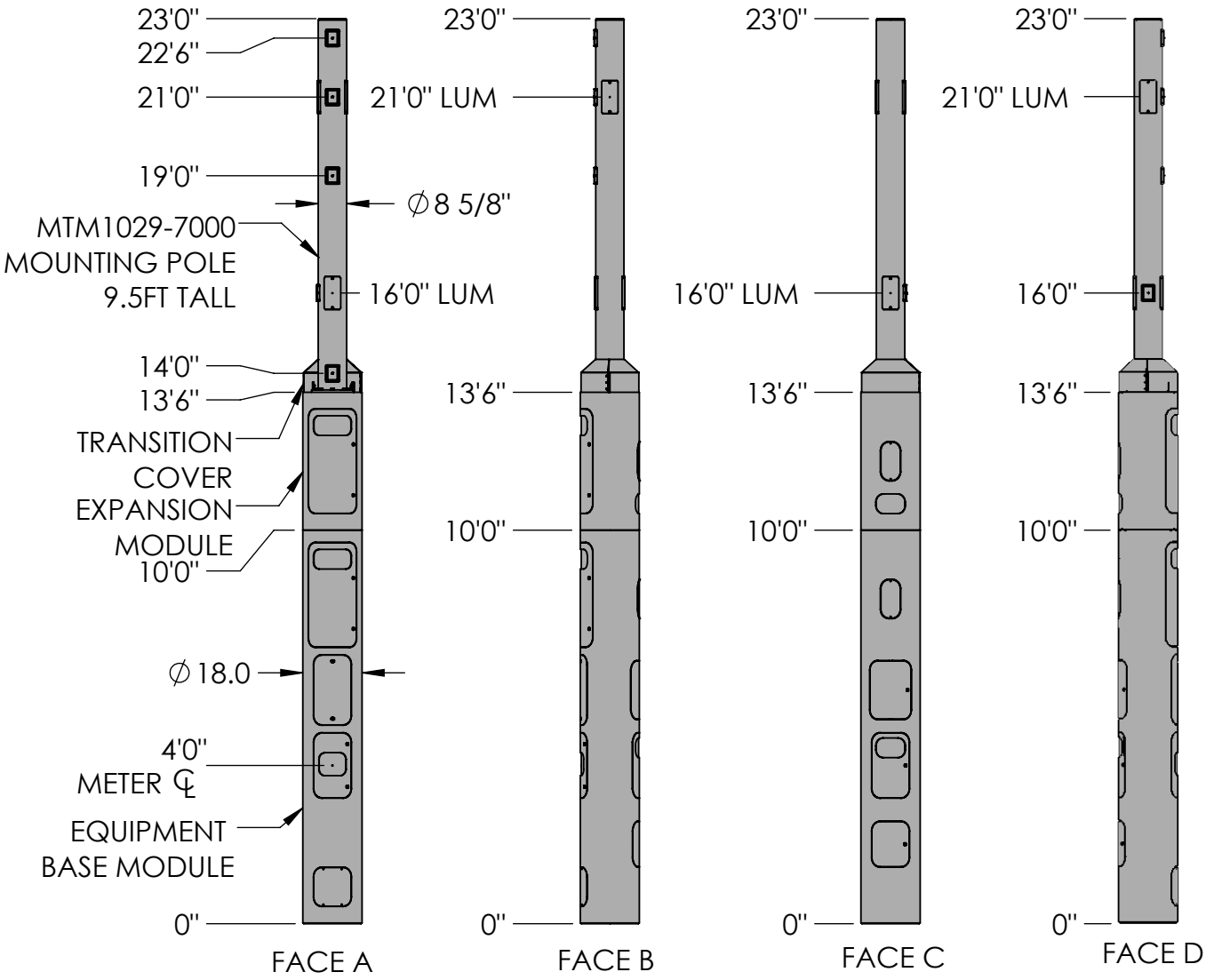

These drawings and specifications are the proprietary property of CommScope Inc. and may be used only for the specific purpose authorized in writing by CommScope Inc.

ALL DIMENSIONS ARE IN INCHES U.O.S.
TOLERANCES UNLESS OTHERWISE SPECIFIED:

.X = ±	.12	ANGLES	±2°
.XX = ±	.06	FRACTIONS	±1/32
.XXX= ±	.031		

REMOVE BURRS AND BREAK EDGES .005

DO NOT SCALE THIS PRINT

DRAWN BY: MJP	SHEET: 1 of 1	PART NUMBER: 760239946xx23Dx
CHECKED BY:	SCALE:	DESCRIPTION: METRO CELL, 18 IN INTEGRATED POLE SOLUTION
DATE:	MATERIAL:	DRAWING TYPE:
REVISION: B	FINISH:	ANDREW. an Amphenol company
	WEIGHT:	

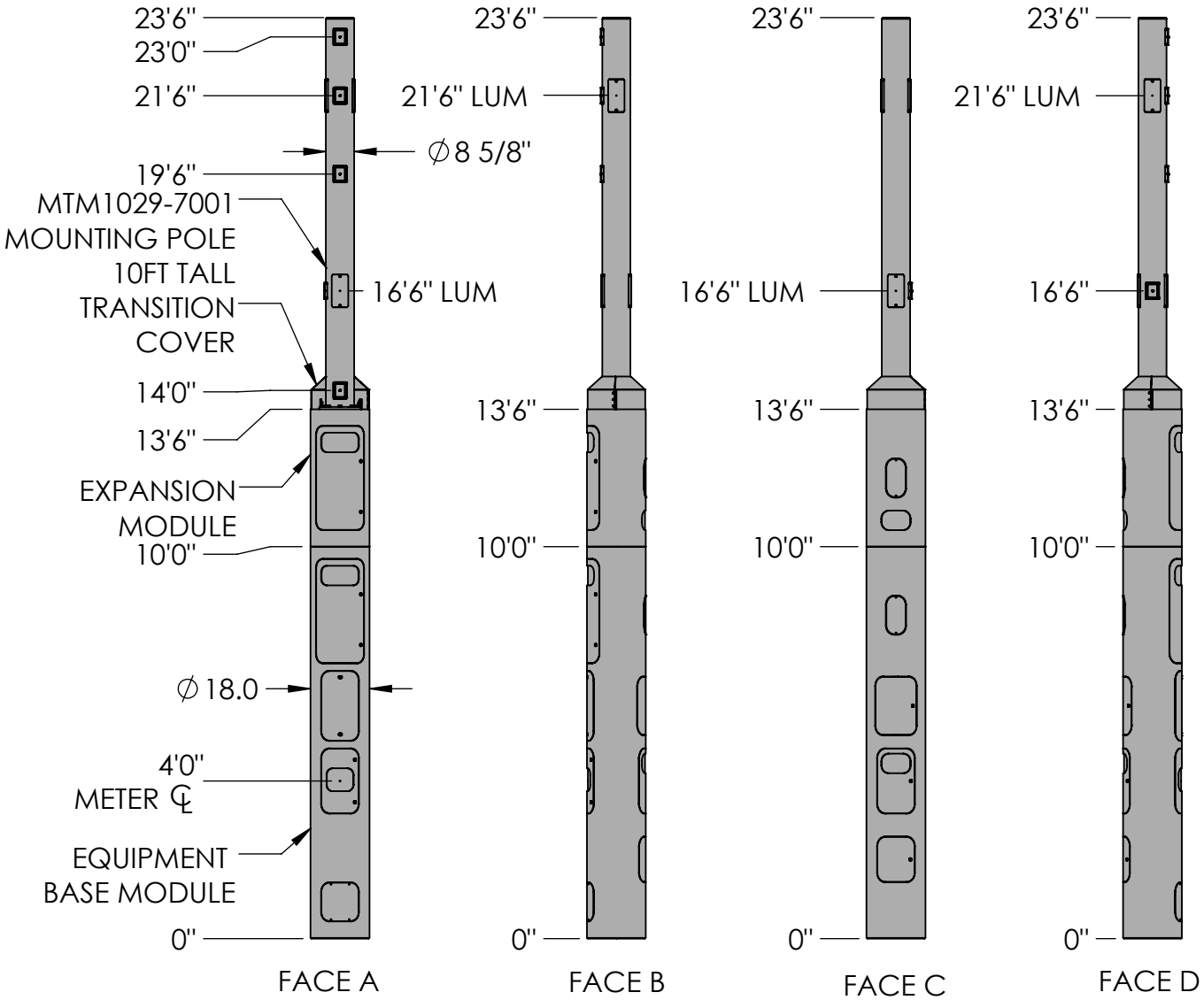

These drawings and specifications are the proprietary property of CommScope Inc. and may be used only for the specific purpose authorized in writing by CommScope Inc.

ALL DIMENSIONS ARE IN INCHES U.O.S.
TOLERANCES UNLESS OTHERWISE SPECIFIED:

.X = ±	.12	ANGLES	±2°
.XX = ±	.06	FRACTIONS	±1/32
.XXX= ±	.031		

REMOVE BURRS AND BREAK EDGES .005

DO NOT SCALE THIS PRINT

DRAWN BY: MJP	SHEET: 1 of 1	PART NUMBER: 760239946xx24Dx
CHECKED BY:	SCALE:	DESCRIPTION: METRO CELL, 18 IN INTEGRATED POLE SOLUTION
DATE:	MATERIAL:	DRAWING TYPE:
REVISION: B	FINISH:	ANDREW an Amphenol company
	WEIGHT:	

REVISIONS			
REV.	DESCRIPTION	BY	DATE
A	PRELIMINARY RELEASE	MJP	02/20/2021

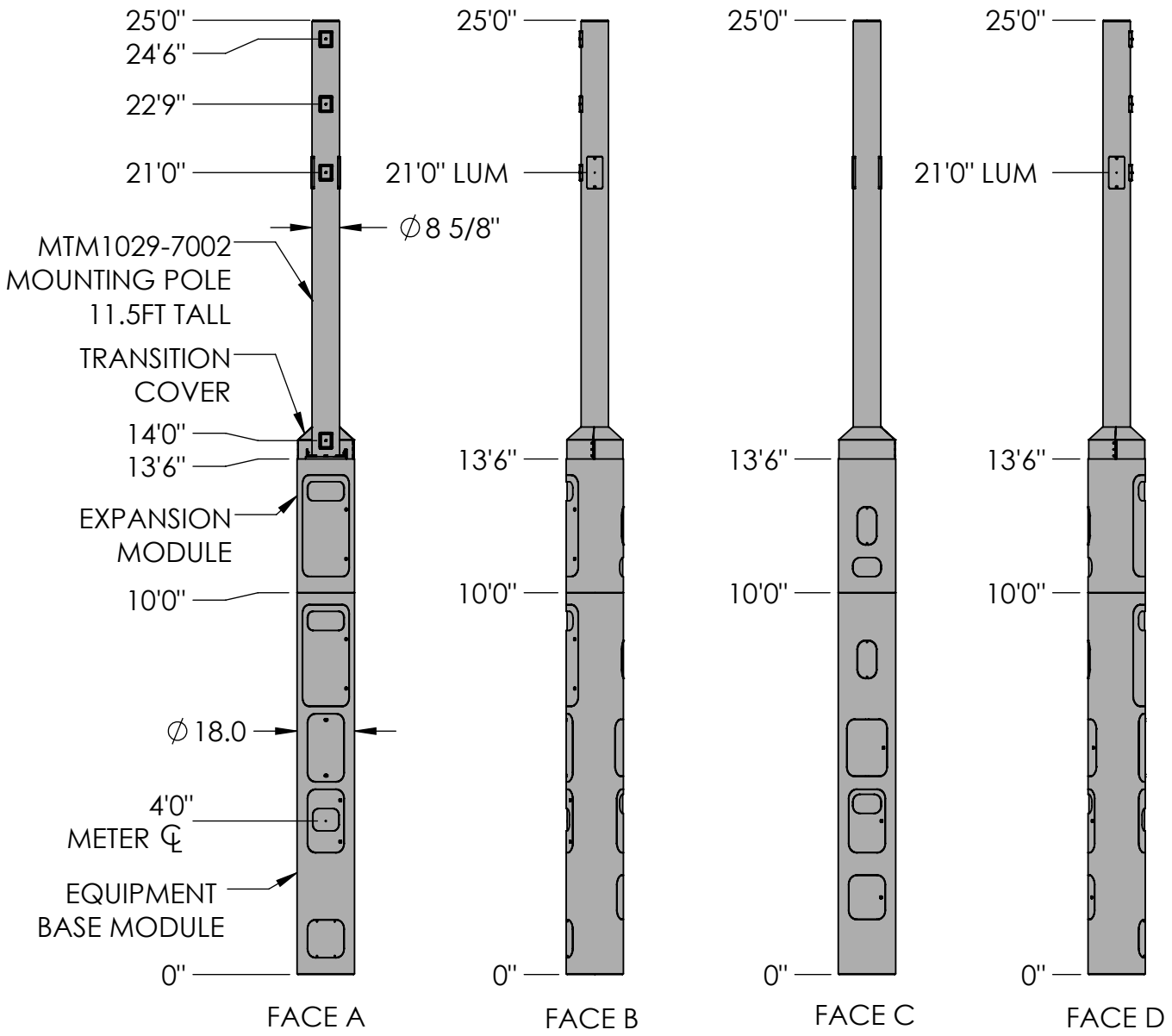

These drawings and specifications are the proprietary property of CommScope Inc. and may be used only for the specific purpose authorized in writing by CommScope Inc.

ALL DIMENSIONS ARE IN INCHES U.O.S.
TOLERANCES UNLESS OTHERWISE SPECIFIED:

.X = ±	.12	ANGLES	±2°
.XX = ±	.06	FRACTIONS	±1/32
.XXX= ±	.031		

REMOVE BURRS AND BREAK EDGES .005

DO NOT SCALE THIS PRINT

DRAWN BY: MJP	SHEET: 1 of 1	PART NUMBER: 760239946xx25Dx
CHECKED BY:	SCALE:	DESCRIPTION: METRO CELL, 18 IN INTEGRATED POLE SOLUTION
DATE:	MATERIAL:	DRAWING TYPE:
REVISION: B	FINISH:	ANDREW an Amphenol company
	WEIGHT:	

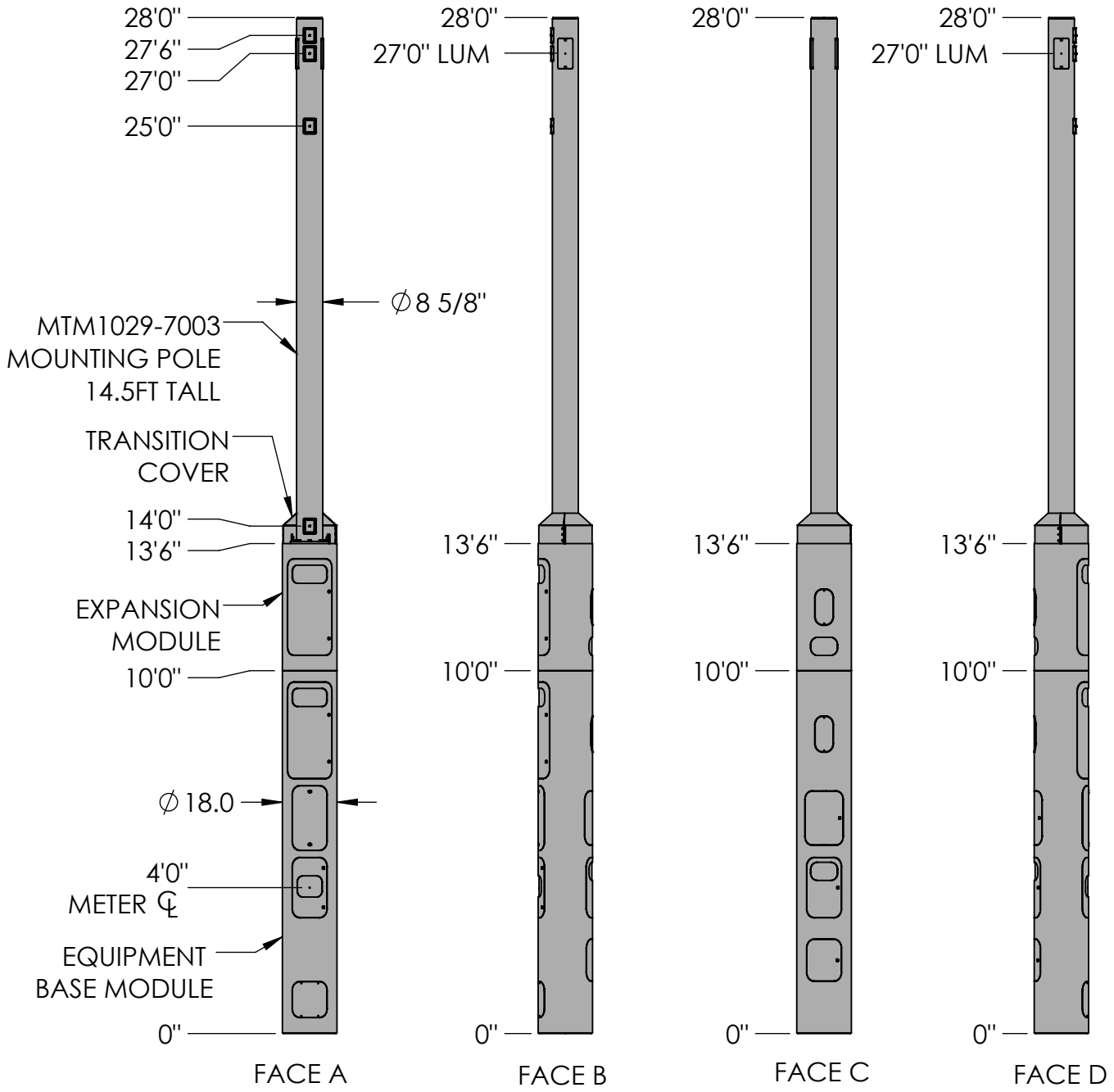

These drawings and specifications are the proprietary property of CommScope Inc. and may be used only for the specific purpose authorized in writing by CommScope Inc.

ALL DIMENSIONS ARE IN INCHES U.O.S.
TOLERANCES UNLESS OTHERWISE SPECIFIED:

.X = ±	.12	ANGLES	±2°
.XX = ±	.06	FRACTIONS	±1/32
.XXX= ±	.031		

REMOVE BURRS AND BREAK EDGES .005

DO NOT SCALE THIS PRINT

DRAWN BY: MJP	SHEET: 1 of 1	PART NUMBER: 760239946xx28Dx
CHECKED BY:	SCALE:	DESCRIPTION: METRO CELL, 18 IN INTEGRATED POLE SOLUTION
DATE:	MATERIAL:	DRAWING TYPE:
REVISION: B	FINISH:	ANDREW. an Amphenol company
	WEIGHT:	

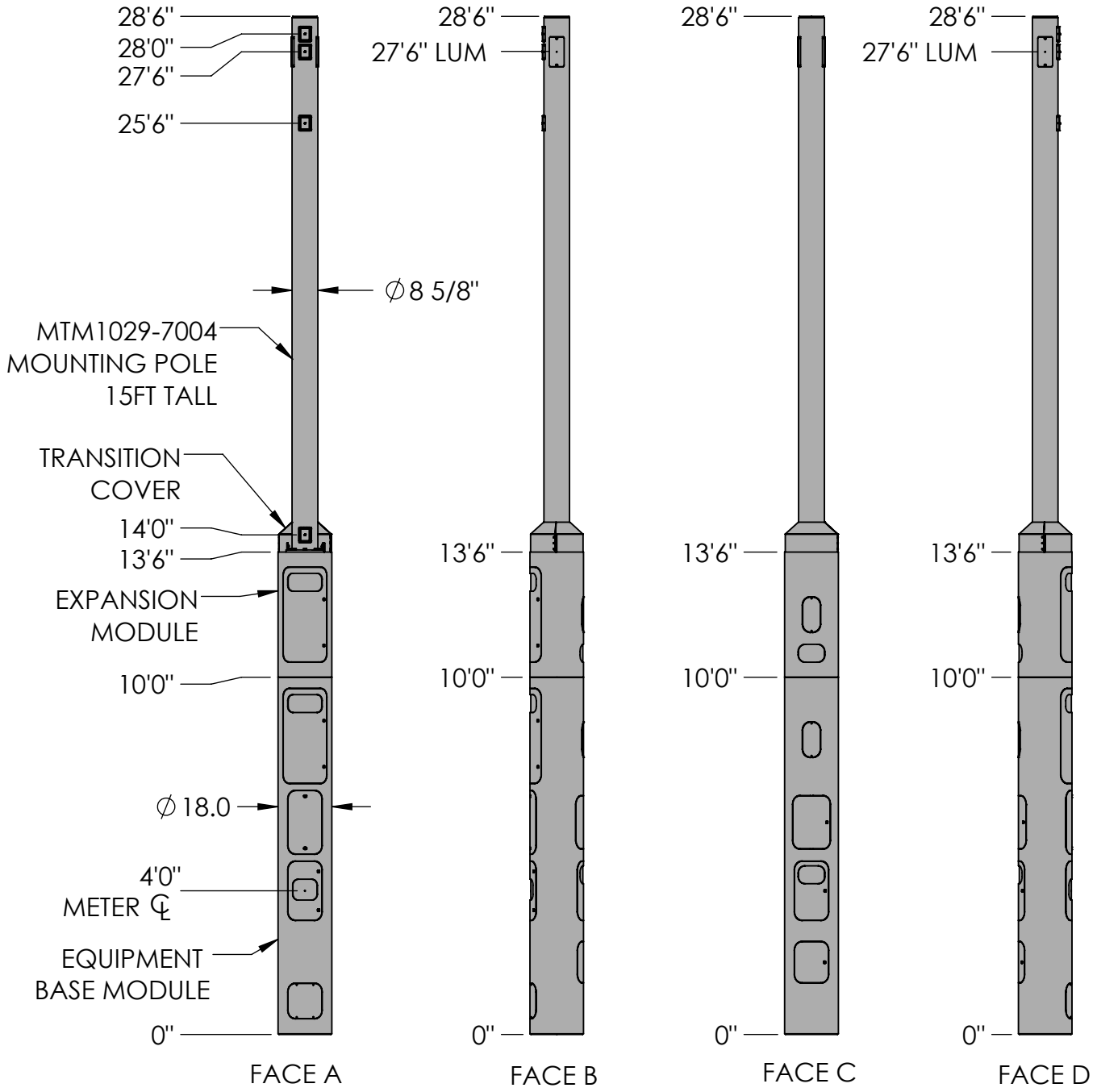

These drawings and specifications are the proprietary property of CommScope Inc. and may be used only for the specific purpose authorized in writing by CommScope Inc.

ALL DIMENSIONS ARE IN INCHES U.O.S.
TOLERANCES UNLESS OTHERWISE SPECIFIED:

.X = ±	.12	ANGLES	±2°
.XX = ±	.06	FRACTIONS	±1/32
.XXX= ±	.031		

REMOVE BURRS AND BREAK EDGES .005

DO NOT SCALE THIS PRINT

DRAWN BY: MJP	SHEET: 1 of 1	PART NUMBER: 760239946xx29Dx
CHECKED BY:	SCALE:	DESCRIPTION: METRO CELL, 18 IN INTEGRATED POLE SOLUTION
DATE:	MATERIAL:	DRAWING TYPE:
REVISION: B	FINISH:	ANDREW an Amphenol company
	WEIGHT:	

REVISIONS			
REV.	DESCRIPTION	BY	DATE
A	PRELIMINARY RELEASE	MJP	02/20/2021

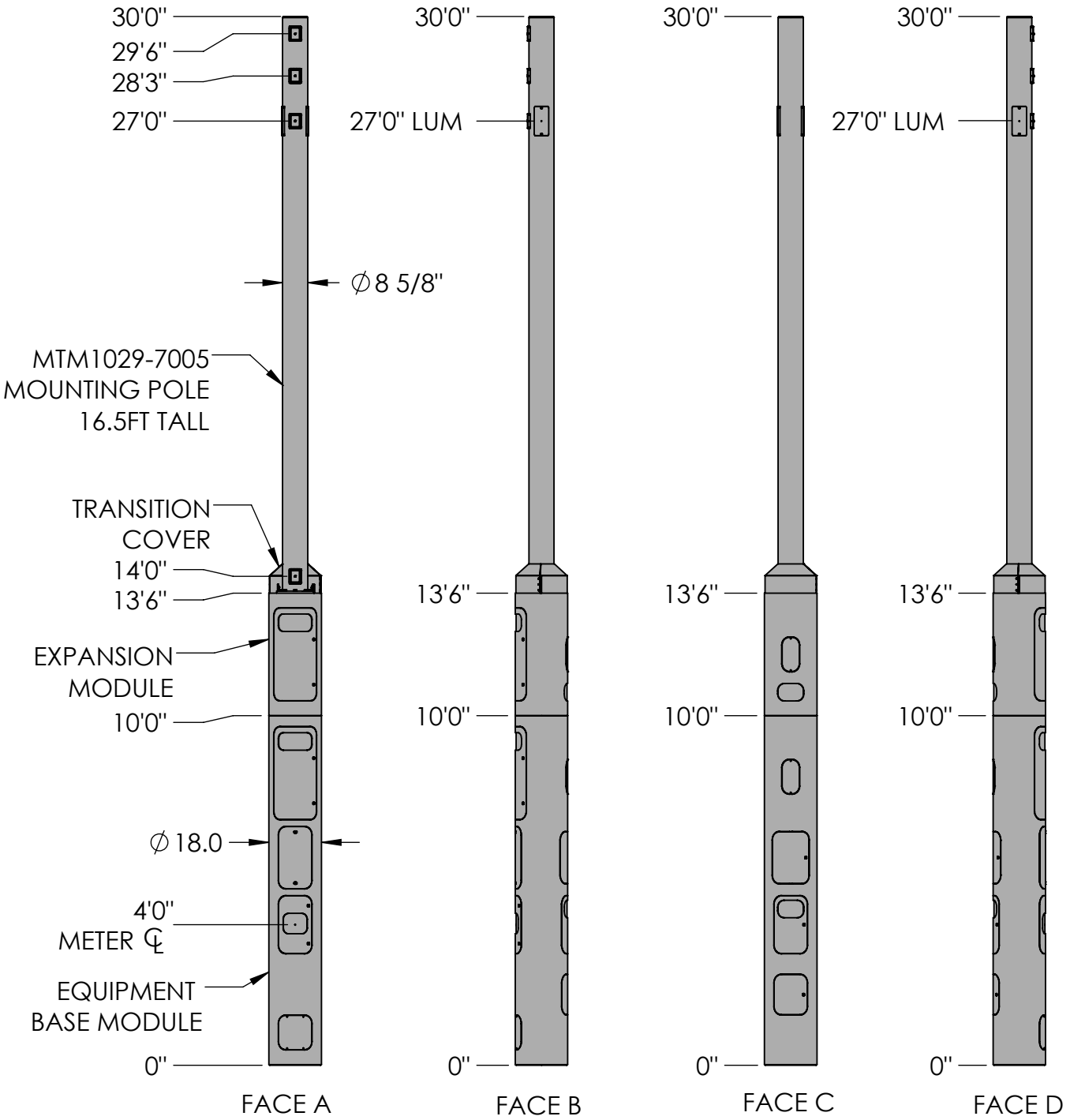

These drawings and specifications are the proprietary property of CommScope Inc. and may be used only for the specific purpose authorized in writing by CommScope Inc.

ALL DIMENSIONS ARE IN INCHES U.O.S.
TOLERANCES UNLESS OTHERWISE SPECIFIED:

.X = ±	.12	ANGLES	±2°
.XX = ±	.06	FRACTIONS	±1/32
.XXX= ±	.031		

REMOVE BURRS AND BREAK EDGES .005

DO NOT SCALE THIS PRINT

DRAWN BY: MJP	SHEET: 1 of 1	PART NUMBER: 760239946xx30Dx
CHECKED BY:	SCALE:	DESCRIPTION: METRO CELL, 18 IN INTEGRATED POLE SOLUTION
DATE:	MATERIAL:	DRAWING TYPE:
REVISION: B	FINISH:	ANDREW. an Amphenol company
	WEIGHT:	

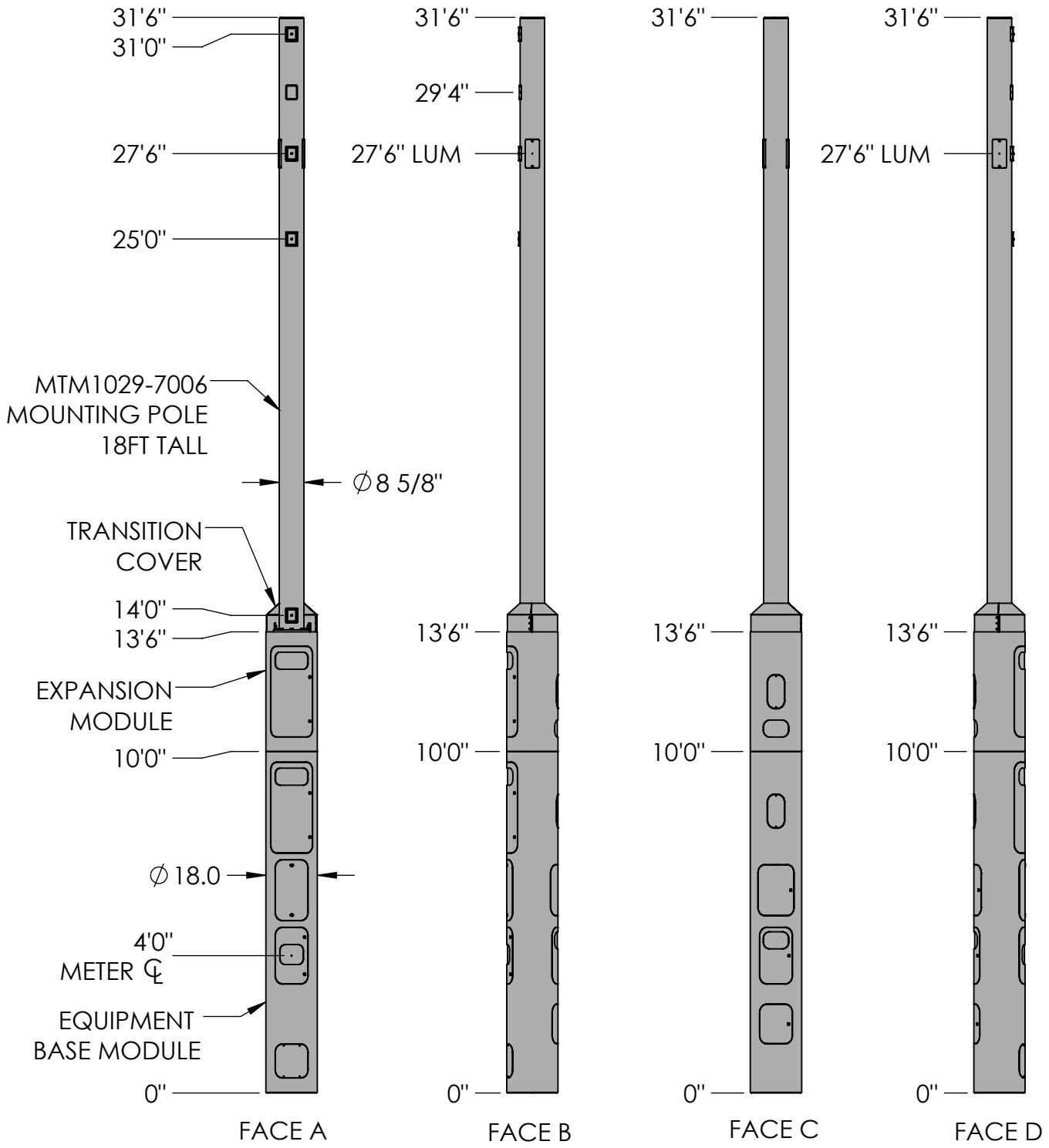

These drawings and specifications are the proprietary property of CommScope Inc. and may be used only for the specific purpose authorized in writing by CommScope Inc.

ALL DIMENSIONS ARE IN INCHES U.O.S.
TOLERANCES UNLESS OTHERWISE SPECIFIED:

.X = ±	.12	ANGLES	±2°
.XX = ±	.06	FRACTIONS	±1/32
.XXX= ±	.031		

REMOVE BURRS AND BREAK EDGES .005

DO NOT SCALE THIS PRINT

DRAWN BY: MJP	SHEET: 1 of 1	PART NUMBER: 760239946xx32Dx
CHECKED BY:	SCALE:	DESCRIPTION: METRO CELL, 18 IN INTEGRATED POLE SOLUTION
DATE:	MATERIAL:	DRAWING TYPE:
REVISION: B	FINISH:	ANDREW an Amphenol company
	WEIGHT:	

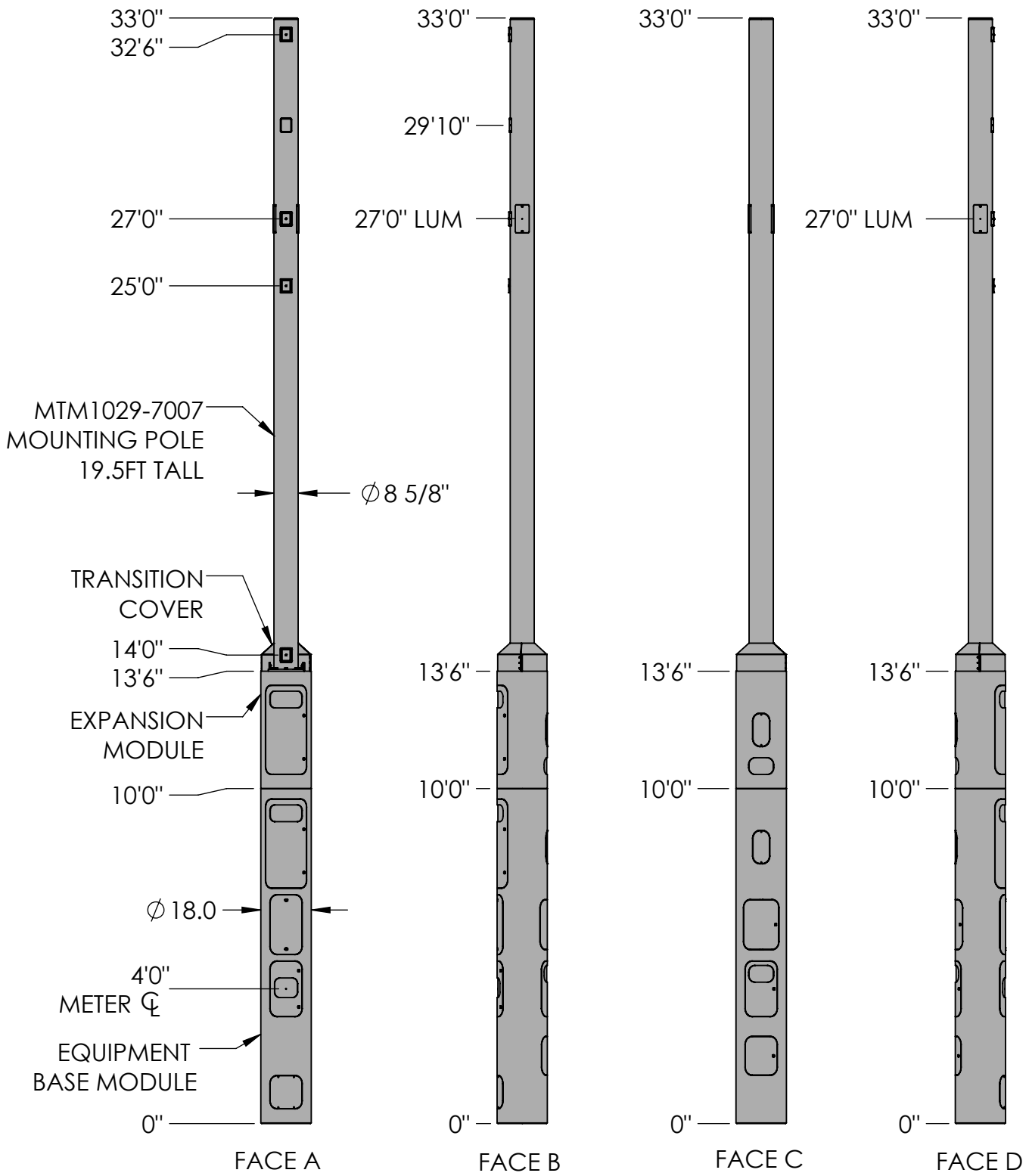

These drawings and specifications are the proprietary property of CommScope Inc. and may be used only for the specific purpose authorized in writing by CommScope Inc.

ALL DIMENSIONS ARE IN INCHES U.O.S.
TOLERANCES UNLESS OTHERWISE SPECIFIED:

.X = ±	.12	ANGLES	±2°
.XX = ±	.06	FRACTIONS	±1/32
.XXX= ±	.031		

REMOVE BURRS AND BREAK EDGES .005

DO NOT SCALE THIS PRINT

DRAWN BY: MJP	SHEET: 1 of 1	PART NUMBER: 760239946xx33Dx
CHECKED BY:	SCALE:	DESCRIPTION: METRO CELL, 18 IN INTEGRATED POLE SOLUTION
DATE:	MATERIAL:	DRAWING TYPE:
REVISION: B	FINISH:	ANDREW. an Amphenol company
	WEIGHT:	

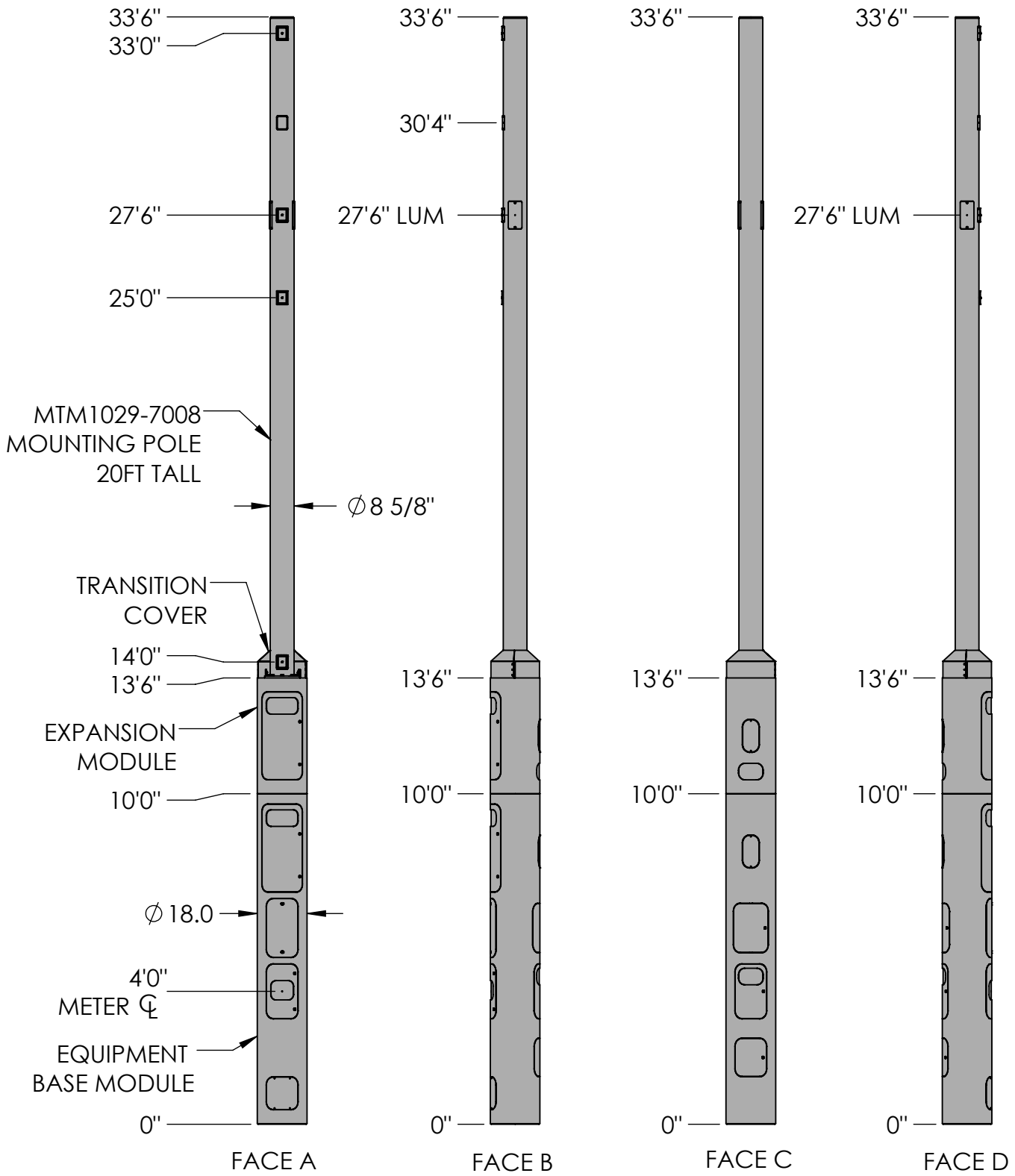

These drawings and specifications are the proprietary property of CommScope Inc. and may be used only for the specific purpose authorized in writing by CommScope Inc.

ALL DIMENSIONS ARE IN INCHES U.O.S.
TOLERANCES UNLESS OTHERWISE SPECIFIED:

.X = ±	.12	ANGLES	±2°
.XX = ±	.06	FRACTIONS	±1/32
.XXX= ±	.031		

REMOVE BURRS AND BREAK EDGES .005

DO NOT SCALE THIS PRINT

DRAWN BY: MJP	SHEET: 1 of 1	PART NUMBER: 760239946xx34Dx
CHECKED BY:	SCALE:	DESCRIPTION: METRO CELL, 18 IN INTEGRATED POLE SOLUTION
DATE:	MATERIAL:	DRAWING TYPE:
REVISION: B	FINISH:	ANDREW an Amphenol company
	WEIGHT:	

REVISIONS			
REV.	DESCRIPTION	BY	DATE
A	PRELIMINARY RELEASE	MJP	02/20/2021

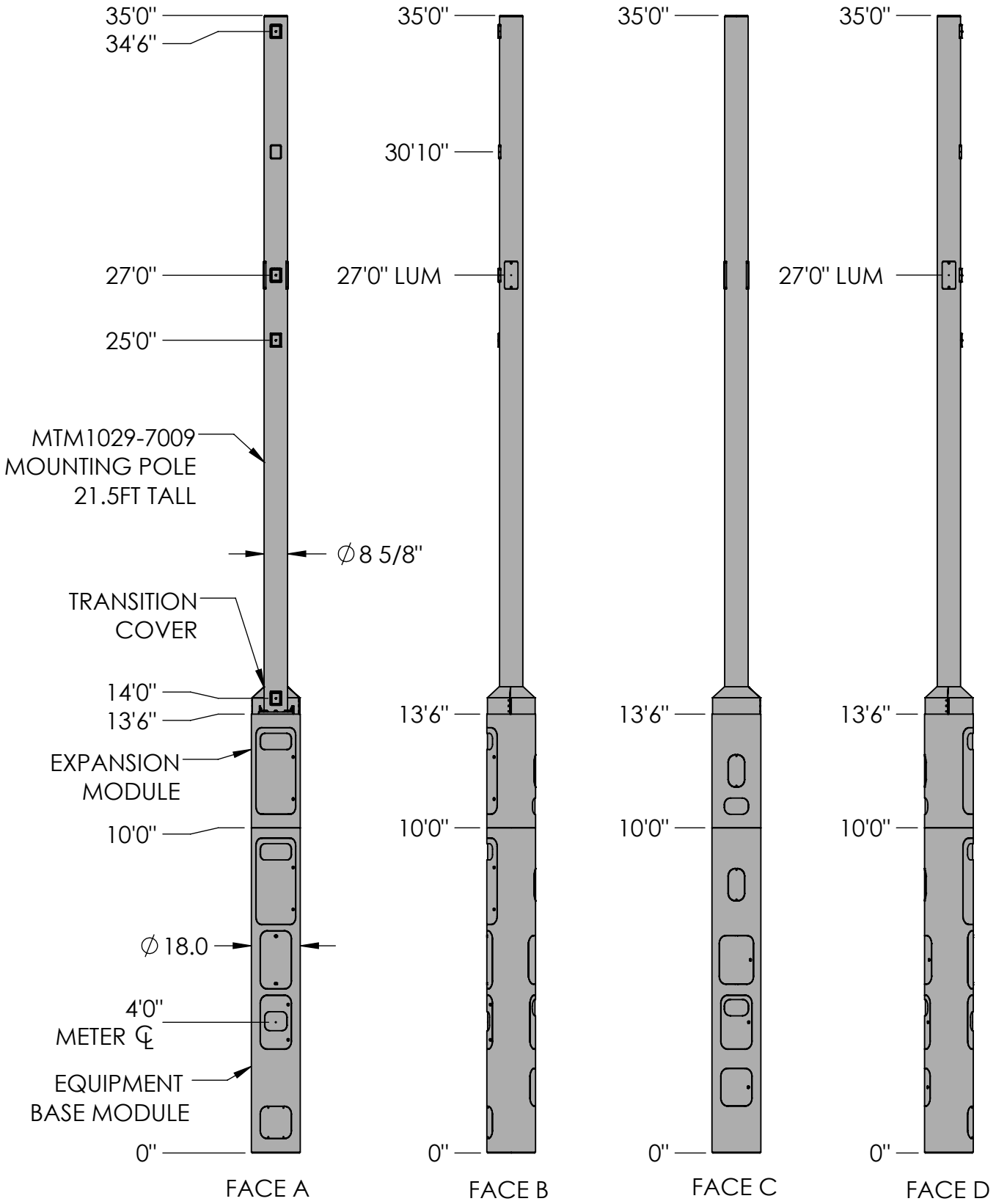

These drawings and specifications are the proprietary property of CommScope Inc. and may be used only for the specific purpose authorized in writing by CommScope Inc.

ALL DIMENSIONS ARE IN INCHES U.O.S.
TOLERANCES UNLESS OTHERWISE SPECIFIED:

.X = ±	.12	ANGLES	±2°
.XX = ±	.06	FRACTIONS	±1/32
.XXX= ±	.031		

REMOVE BURRS AND BREAK EDGES .005

DO NOT SCALE THIS PRINT

DRAWN BY: MJP	SHEET: 1 of 1	PART NUMBER: 760239946xx35Dx
CHECKED BY:	SCALE:	DESCRIPTION: METRO CELL, 18 IN INTEGRATED POLE SOLUTION
DATE:	MATERIAL:	DRAWING TYPE:
REVISION: B	FINISH:	ANDREW. an Amphenol company
	WEIGHT:	

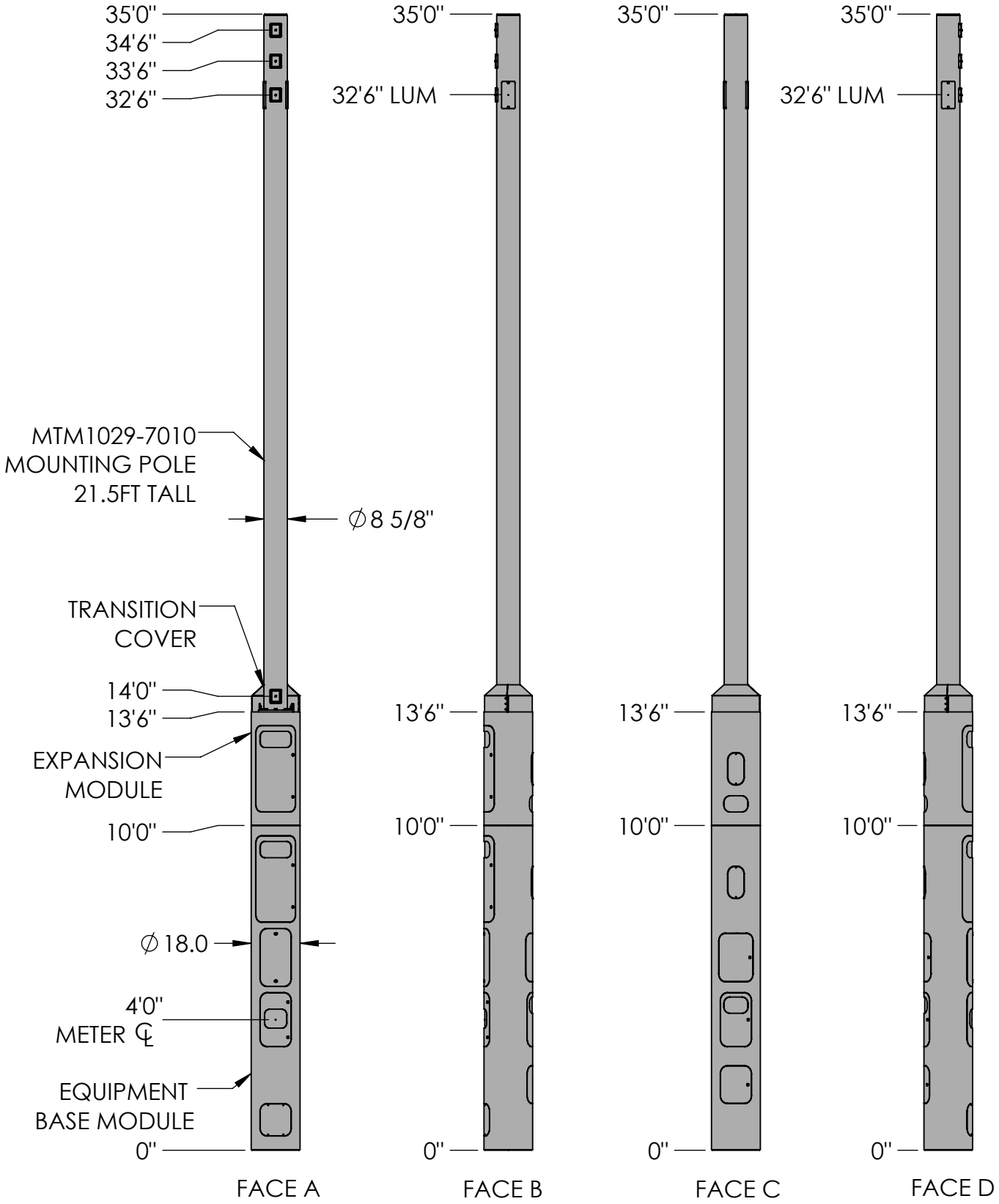

These drawings and specifications are the proprietary property of CommScope Inc. and may be used only for the specific purpose authorized in writing by CommScope Inc.

ALL DIMENSIONS ARE IN INCHES U.O.S.
TOLERANCES UNLESS OTHERWISE SPECIFIED:

.X = ±	.12	ANGLES	±2°
.XX = ±	.06	FRACTIONS	±1/32
.XXX= ±	.031		

REMOVE BURRS AND BREAK EDGES .005

DO NOT SCALE THIS PRINT

DRAWN BY: MJP	SHEET: 1 of 1	PART NUMBER: 760239946xx35Dx
CHECKED BY:	SCALE:	DESCRIPTION: METRO CELL, 18 IN INTEGRATED POLE SOLUTION
DATE:	MATERIAL:	DRAWING TYPE:
REVISION: B	FINISH:	ANDREW® an Amphenol company
	WEIGHT:	

REVISIONS			
REV.	DESCRIPTION	BY	DATE
A	PRELIMINARY RELEASE	MJP	02/20/2021

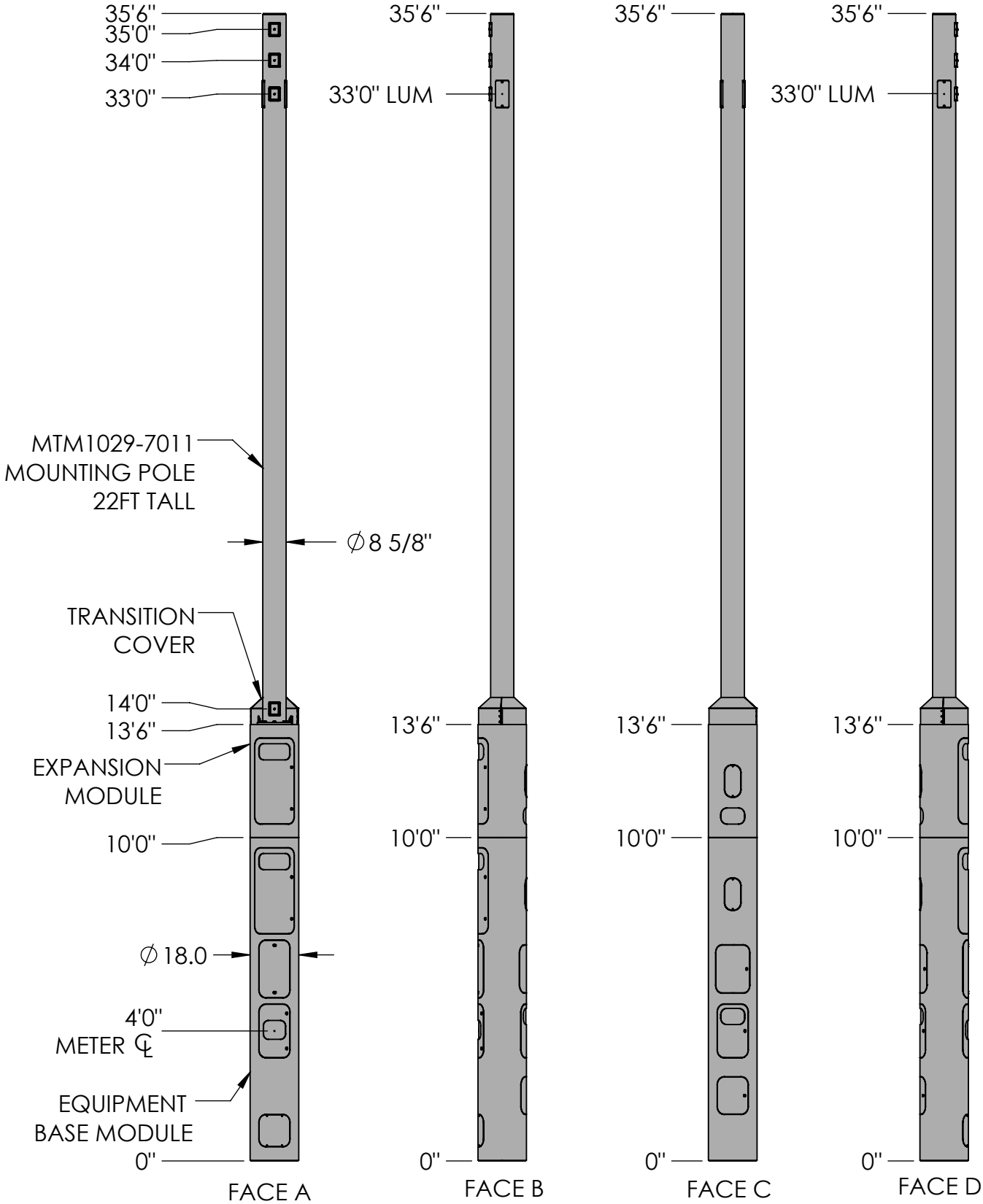

These drawings and specifications are the proprietary property of CommScope Inc. and may be used only for the specific purpose authorized in writing by CommScope Inc.

ALL DIMENSIONS ARE IN INCHES U.O.S.
TOLERANCES UNLESS OTHERWISE SPECIFIED:

.X = ±	.12	ANGLES	±2°
.XX = ±	.06	FRACTIONS	±1/32
.XXX= ±	.031		

REMOVE BURRS AND BREAK EDGES .005

DO NOT SCALE THIS PRINT

DRAWN BY: MJP	SHEET: 1 of 1	PART NUMBER: 760239946xx36Dx
CHECKED BY:	SCALE:	DESCRIPTION: METRO CELL, 18 IN INTEGRATED POLE SOLUTION
DATE:	MATERIAL:	DRAWING TYPE:
REVISION: B	FINISH:	ANDREW. an Amphenol company
	WEIGHT:	

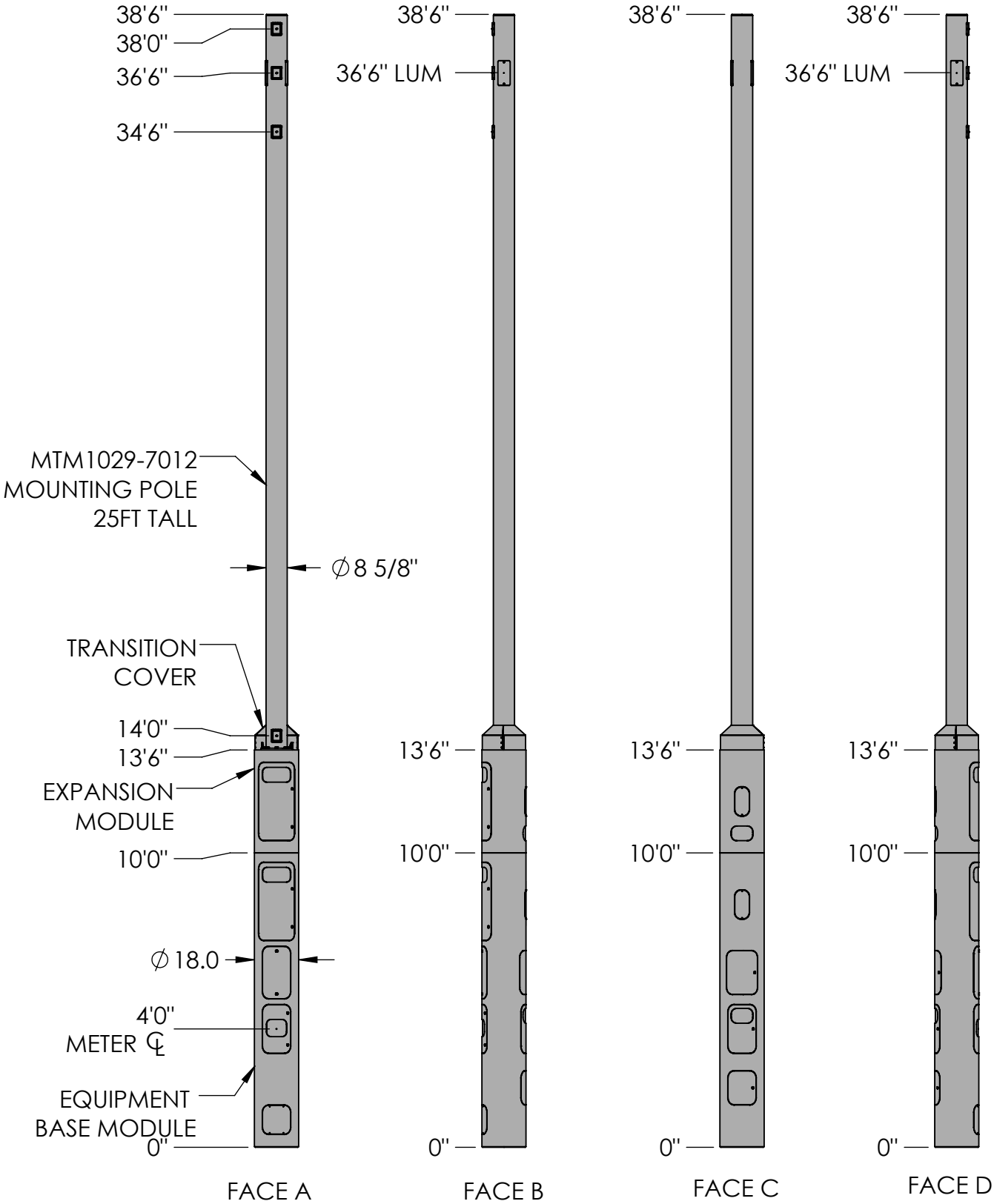

These drawings and specifications are the proprietary property of CommScope Inc. and may be used only for the specific purpose authorized in writing by CommScope Inc.

ALL DIMENSIONS ARE IN INCHES U.O.S.
TOLERANCES UNLESS OTHERWISE SPECIFIED:

.X = ±	.12	ANGLES	±2°
.XX = ±	.06	FRACTIONS	±1/32
.XXX= ±	.031		

REMOVE BURRS AND BREAK EDGES .005

DO NOT SCALE THIS PRINT

DRAWN BY: MJP	SHEET: 1 of 1	PART NUMBER: 760239946xx39Dx
CHECKED BY:	SCALE:	DESCRIPTION: METRO CELL, 18 IN INTEGRATED POLE SOLUTION
DATE:	MATERIAL:	DRAWING TYPE:
REVISION: B	FINISH:	ANDREW an Amphenol company
	WEIGHT:	

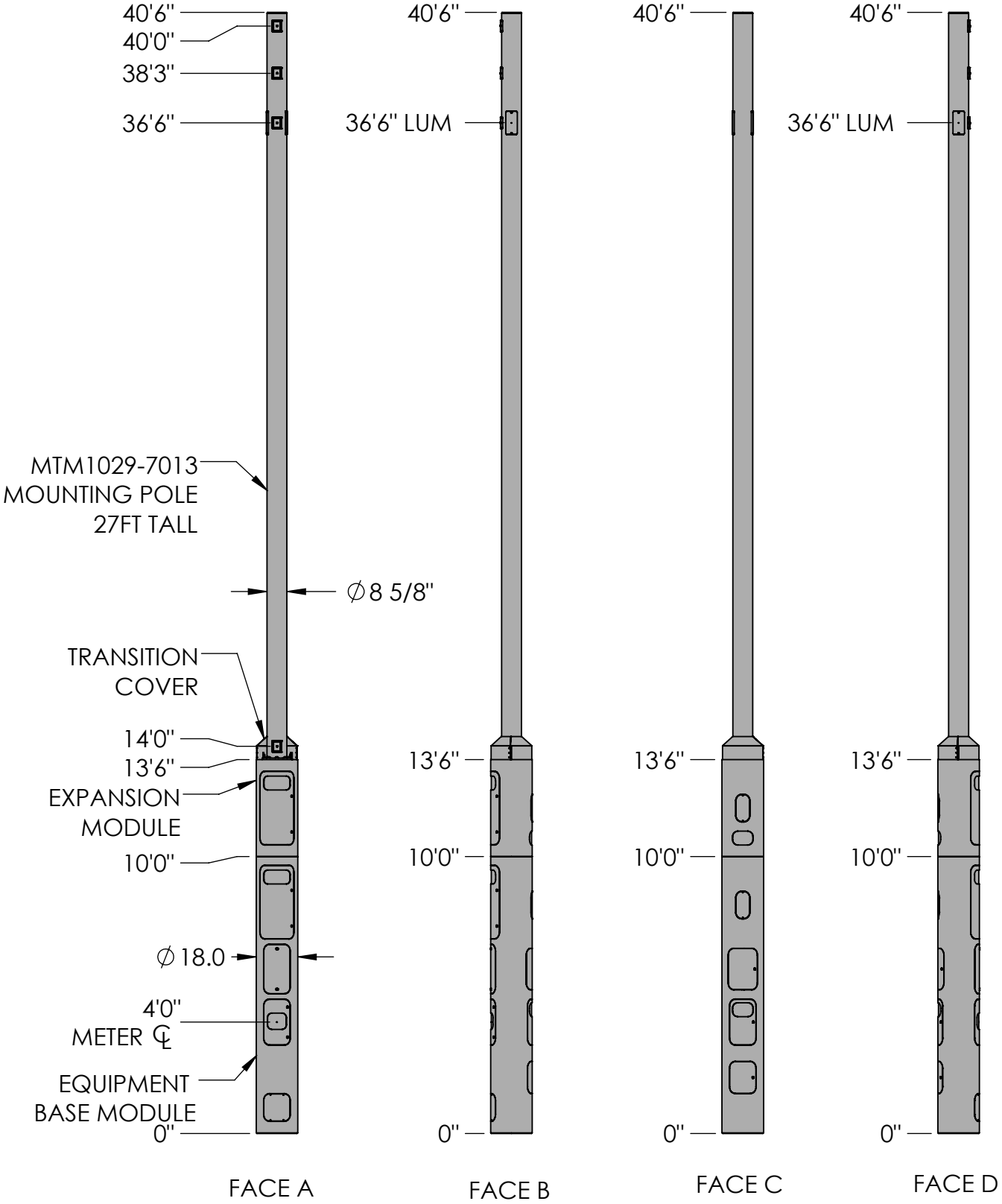

These drawings and specifications are the proprietary property of CommScope Inc. and may be used only for the specific purpose authorized in writing by CommScope Inc.

ALL DIMENSIONS ARE IN INCHES U.O.S.
TOLERANCES UNLESS OTHERWISE SPECIFIED:

.X = ±	.12	ANGLES	±2°
.XX = ±	.06	FRACTIONS	±1/32
.XXX= ±	.031		

REMOVE BURRS AND BREAK EDGES .005

DO NOT SCALE THIS PRINT

DRAWN BY: MJP	SHEET: 1 of 1	PART NUMBER: 760239946xx41Dx
CHECKED BY:	SCALE:	DESCRIPTION: METRO CELL, 18 IN INTEGRATED POLE SOLUTION
DATE:	MATERIAL:	DRAWING TYPE:
REVISION: B	FINISH:	ANDREW. an Amphenol company
	WEIGHT:	

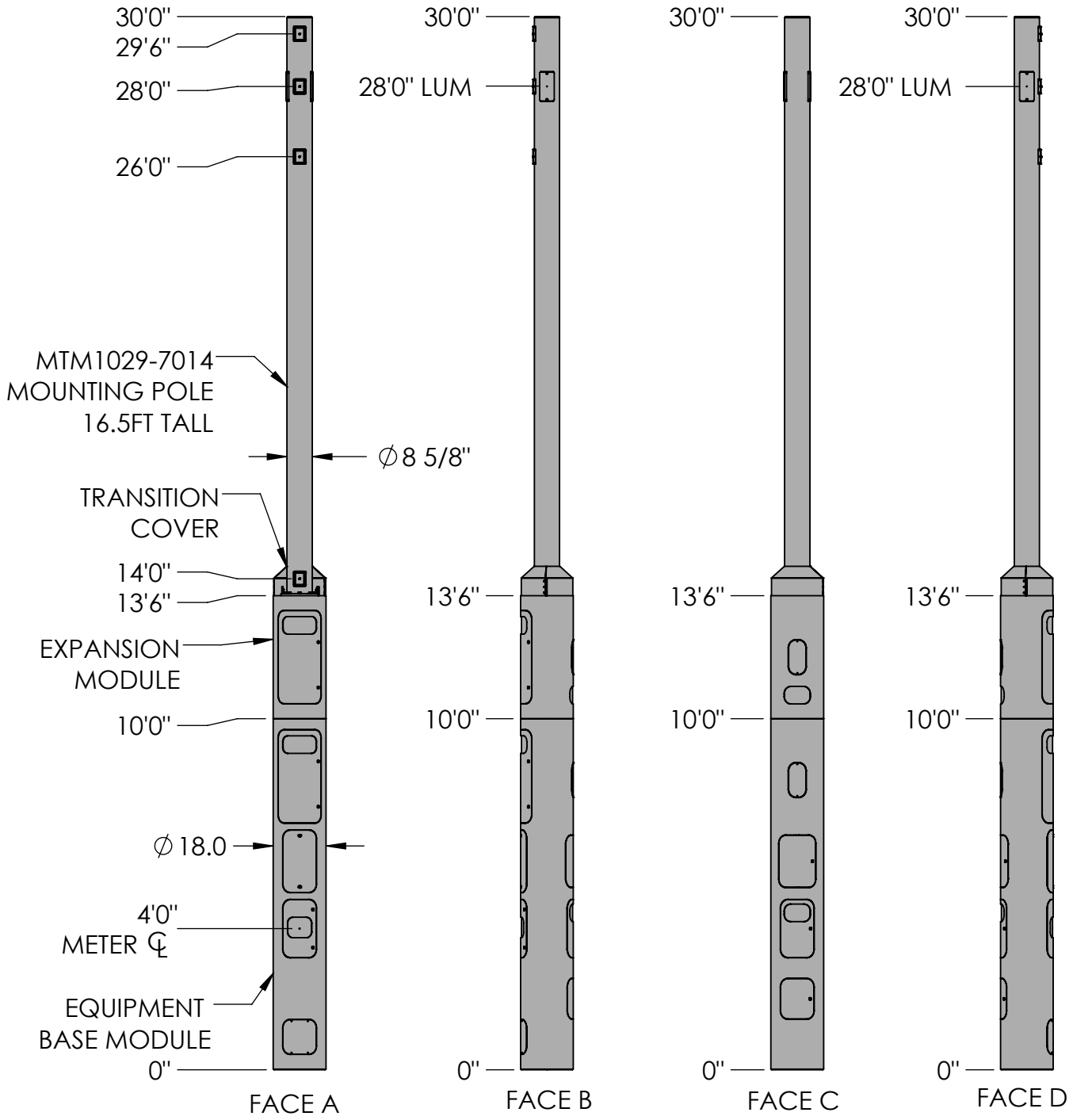

These drawings and specifications are the proprietary property of CommScope Inc. and may be used only for the specific purpose authorized in writing by CommScope Inc.

ALL DIMENSIONS ARE IN INCHES U.O.S.
TOLERANCES UNLESS OTHERWISE SPECIFIED:

.X = ±	.12	ANGLES	±2°
.XX = ±	.06	FRACTIONS	±1/32
.XXX= ±	.031		

REMOVE BURRS AND BREAK EDGES .005

DO NOT SCALE THIS PRINT

DRAWN BY: MJP	SHEET: 1 of 1	PART NUMBER: 760239946xx30Dx
CHECKED BY:	SCALE:	DESCRIPTION: METRO CELL, 18 IN INTEGRATED POLE SOLUTION
DATE:	MATERIAL:	DRAWING TYPE:
REVISION: B	FINISH:	ANDREW an Amphenol company
	WEIGHT:	

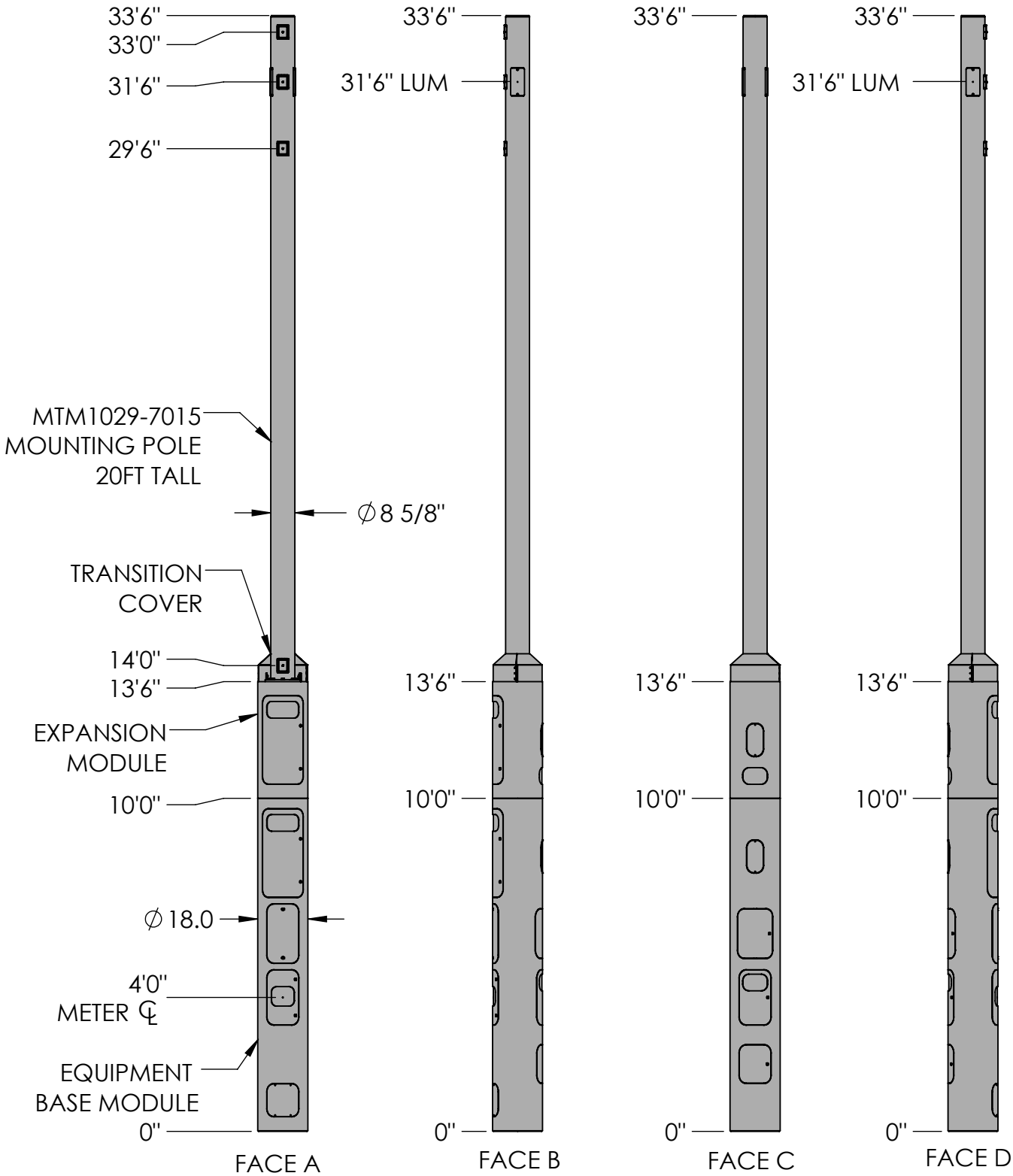

These drawings and specifications are the proprietary property of CommScope Inc. and may be used only for the specific purpose authorized in writing by CommScope Inc.

ALL DIMENSIONS ARE IN INCHES U.O.S.
TOLERANCES UNLESS OTHERWISE SPECIFIED:

.X = ±	.12	ANGLES	±2°
.XX = ±	.06	FRACTIONS	±1/32
.XXX= ±	.031		

REMOVE BURRS AND BREAK EDGES .005

DO NOT SCALE THIS PRINT

DRAWN BY: MJP	SHEET: 1 of 1	PART NUMBER: 760239946xx34Dx
CHECKED BY:	SCALE:	DESCRIPTION: METRO CELL, 18 IN INTEGRATED POLE SOLUTION
DATE:	MATERIAL:	DRAWING TYPE:
REVISION: B	FINISH:	ANDREW an Amphenol company
	WEIGHT:	

REVISIONS			
REV.	DESCRIPTION	BY	DATE
A	PRELIMINARY RELEASE	MJP	02/20/2021

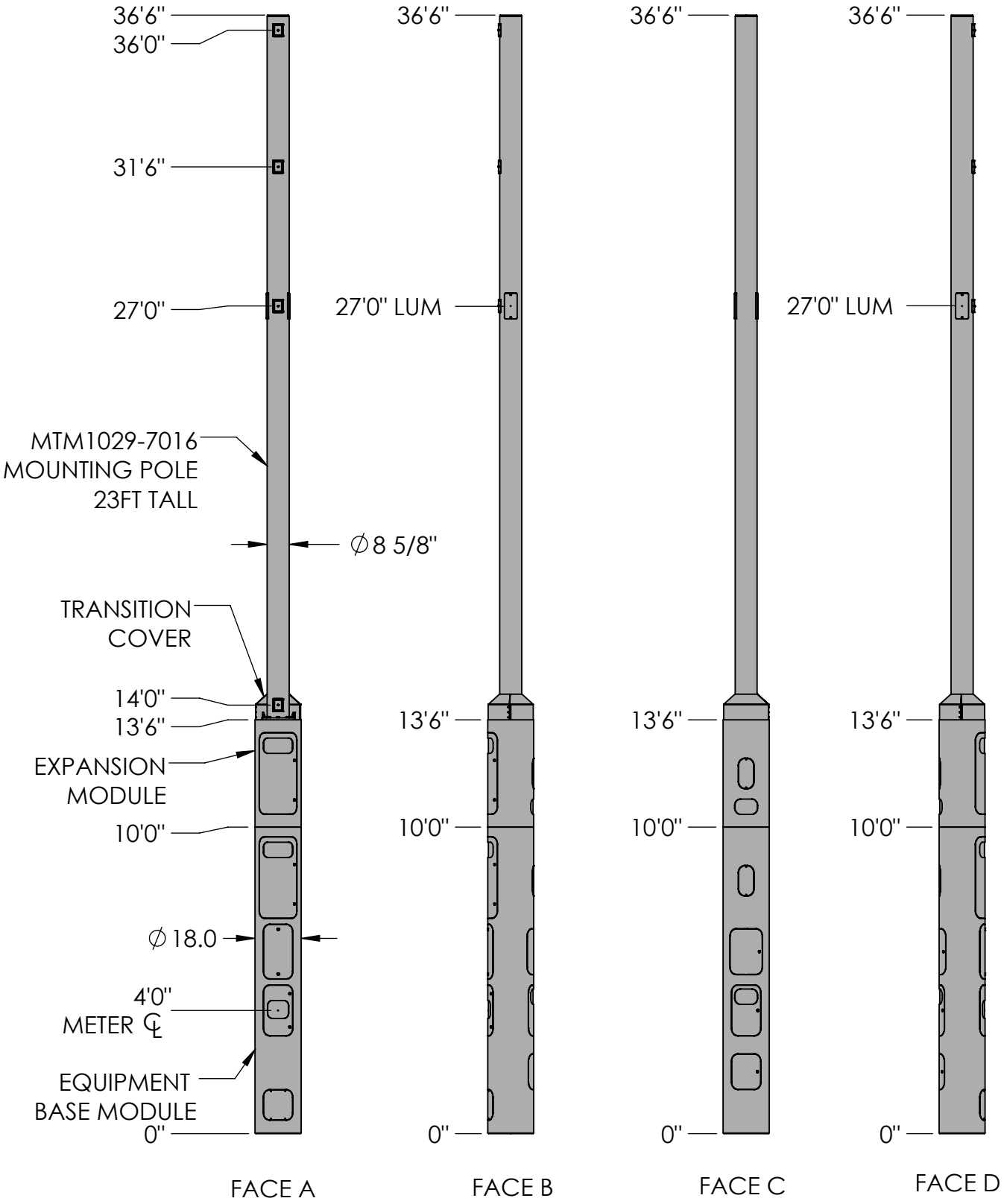

These drawings and specifications are the proprietary property of CommScope Inc. and may be used only for the specific purpose authorized in writing by CommScope Inc.

ALL DIMENSIONS ARE IN INCHES U.O.S.
TOLERANCES UNLESS OTHERWISE SPECIFIED:

.X = ±	.12	ANGLES	±2°
.XX = ±	.06	FRACTIONS	±1/32
.XXX= ±	.031		

REMOVE BURRS AND BREAK EDGES .005

DO NOT SCALE THIS PRINT

DRAWN BY: MJP	SHEET: 1 of 1	PART NUMBER: 760239946xx37Dx
CHECKED BY:	SCALE:	DESCRIPTION: METRO CELL, 18 IN INTEGRATED POLE SOLUTION
DATE:	MATERIAL:	DRAWING TYPE:
REVISION: B	FINISH:	ANDREW an Amphenol company
	WEIGHT:	

REVISIONS			
REV.	DESCRIPTION	BY	DATE
A	PRELIMINARY RELEASE	MJP	02/20/2021

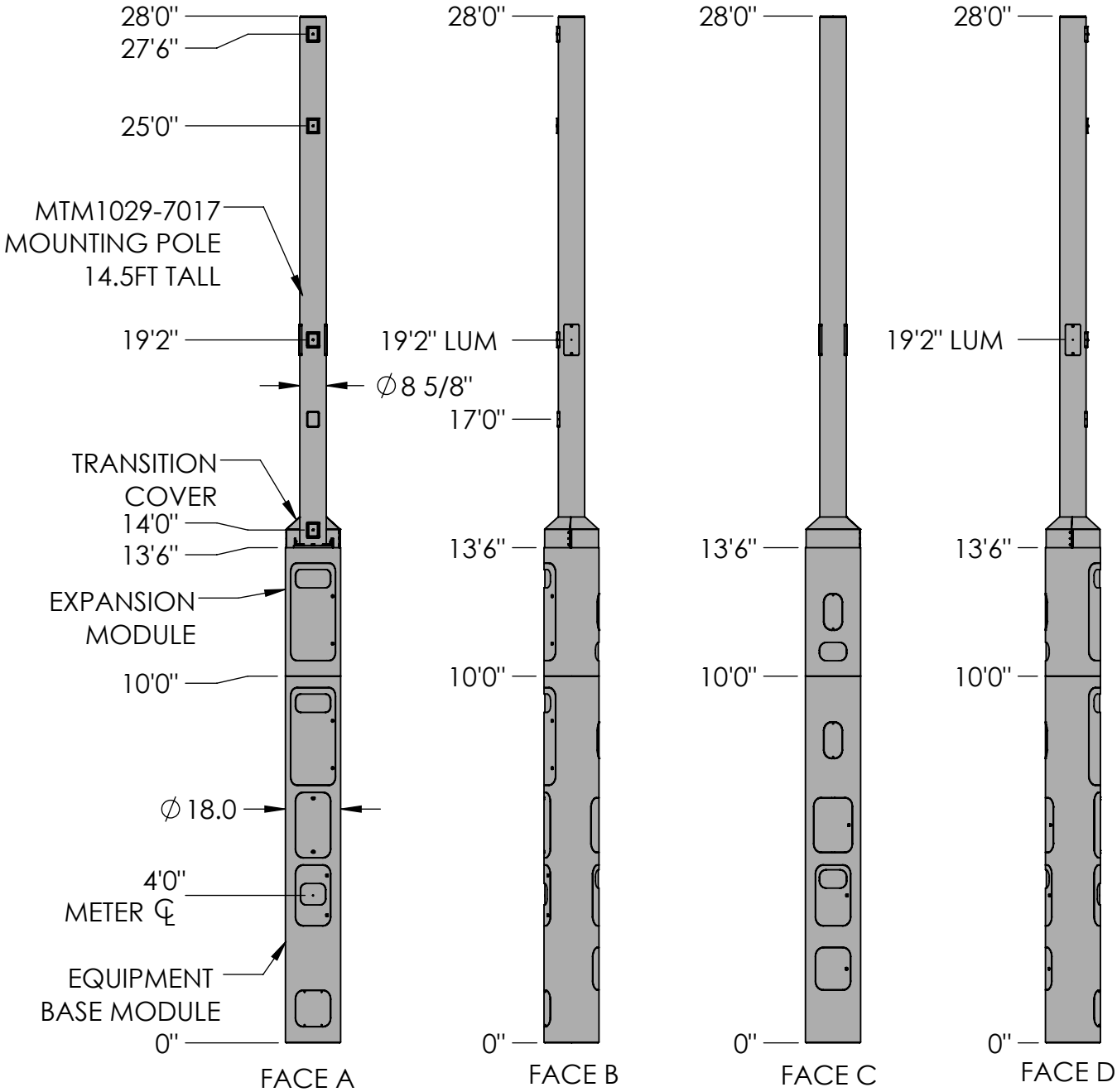

These drawings and specifications are the proprietary property of CommScope Inc. and may be used only for the specific purpose authorized in writing by CommScope Inc.

ALL DIMENSIONS ARE IN INCHES U.O.S.
TOLERANCES UNLESS OTHERWISE SPECIFIED:

.X = ±	.12	ANGLES	±2°
.XX = ±	.06	FRACTIONS	±1/32
.XXX= ±	.031		

REMOVE BURRS AND BREAK EDGES .005

DO NOT SCALE THIS PRINT

DRAWN BY: MJP	SHEET: 1 of 1	PART NUMBER: 760239946xx28Dx
CHECKED BY:	SCALE:	DESCRIPTION: METRO CELL, 18 IN INTEGRATED POLE SOLUTION
DATE:	MATERIAL:	DRAWING TYPE:
REVISION: B	FINISH:	ANDREW an Amphenol company
	WEIGHT:	

REVISIONS			
REV.	DESCRIPTION	BY	DATE
A	PRELIMINARY RELEASE	MJP	02/20/2021

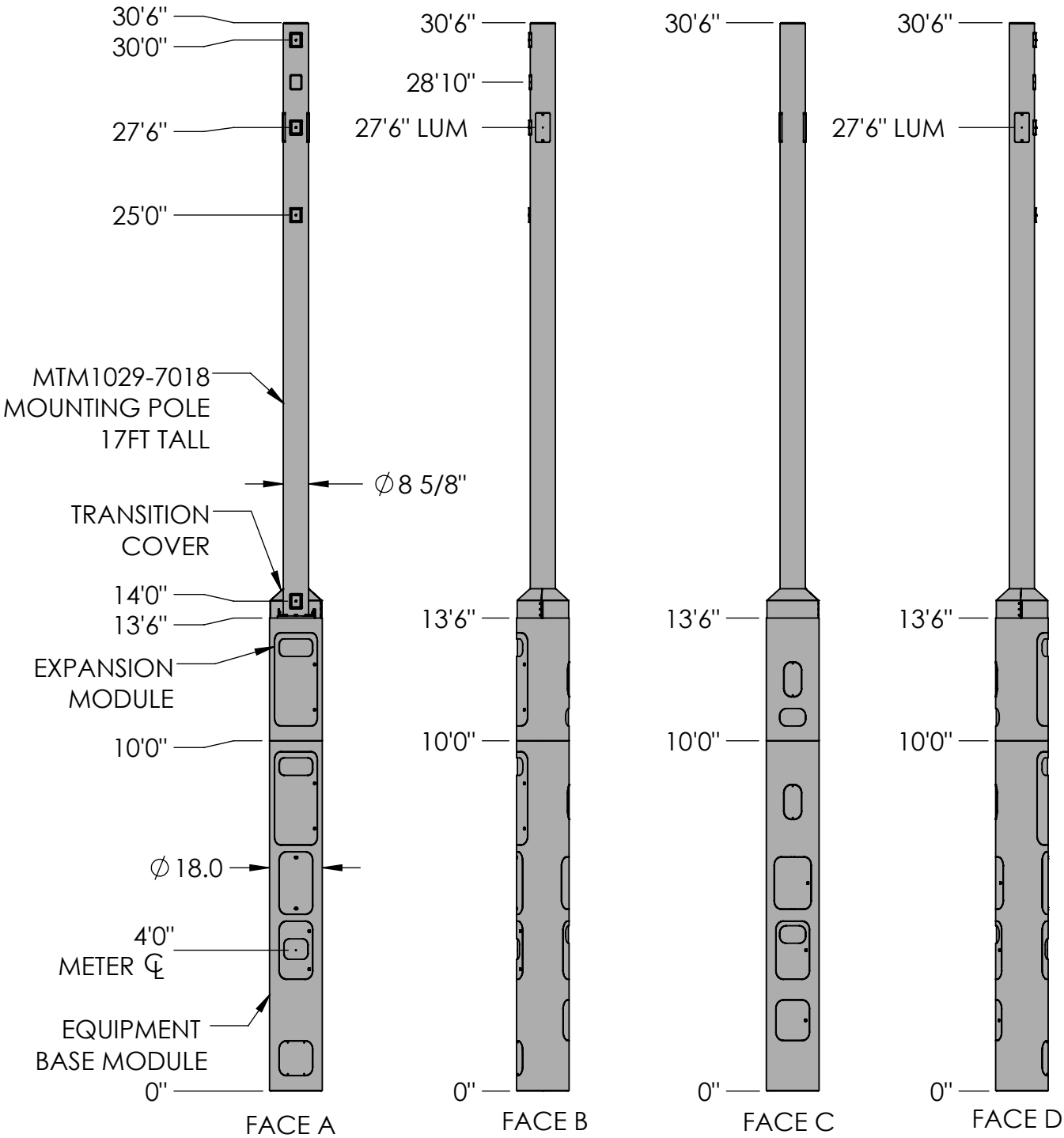

These drawings and specifications are the proprietary property of CommScope Inc. and may be used only for the specific purpose authorized in writing by CommScope Inc.

ALL DIMENSIONS ARE IN INCHES U.O.S.
TOLERANCES UNLESS OTHERWISE SPECIFIED:

.X = ±	.12	ANGLES	±2°
.XX = ±	.06	FRACTIONS	±1/32
.XXX= ±	.031		

REMOVE BURRS AND BREAK EDGES .005

DO NOT SCALE THIS PRINT

DRAWN BY: MJP	SHEET: 1 of 1	PART NUMBER: 760239946xx31Dx
CHECKED BY:	SCALE:	DESCRIPTION: METRO CELL, 18 IN INTEGRATED POLE SOLUTION
DATE:	MATERIAL:	DRAWING TYPE:
REVISION: B	FINISH:	ANDREW an Amphenol company
	WEIGHT:	

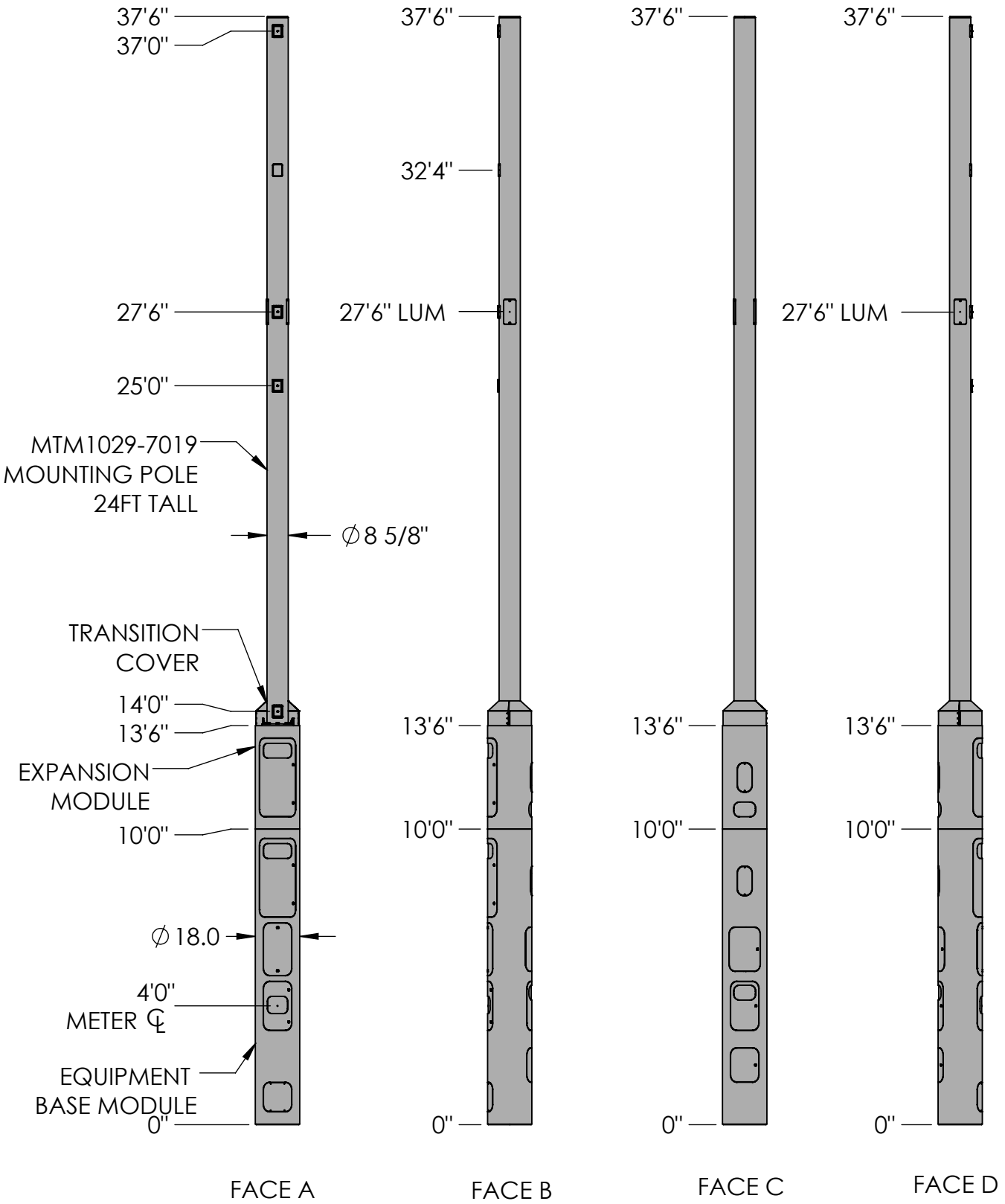

These drawings and specifications are the proprietary property of CommScope Inc. and may be used only for the specific purpose authorized in writing by CommScope Inc.

ALL DIMENSIONS ARE IN INCHES U.O.S.
TOLERANCES UNLESS OTHERWISE SPECIFIED:

.X = ±	.12	ANGLES	±2°
.XX = ±	.06	FRACTIONS	±1/32
.XXX= ±	.031		

REMOVE BURRS AND BREAK EDGES .005

DO NOT SCALE THIS PRINT

DRAWN BY: MJP	SHEET: 1 of 1	PART NUMBER: 760239946xx38Dx	
CHECKED BY:	SCALE:	DESCRIPTION: METRO CELL, 18 IN INTEGRATED POLE SOLUTION	
DATE:	MATERIAL:	DRAWING TYPE:	
REVISION: B	FINISH:	ANDREW an Amphenol company	
	WEIGHT:		

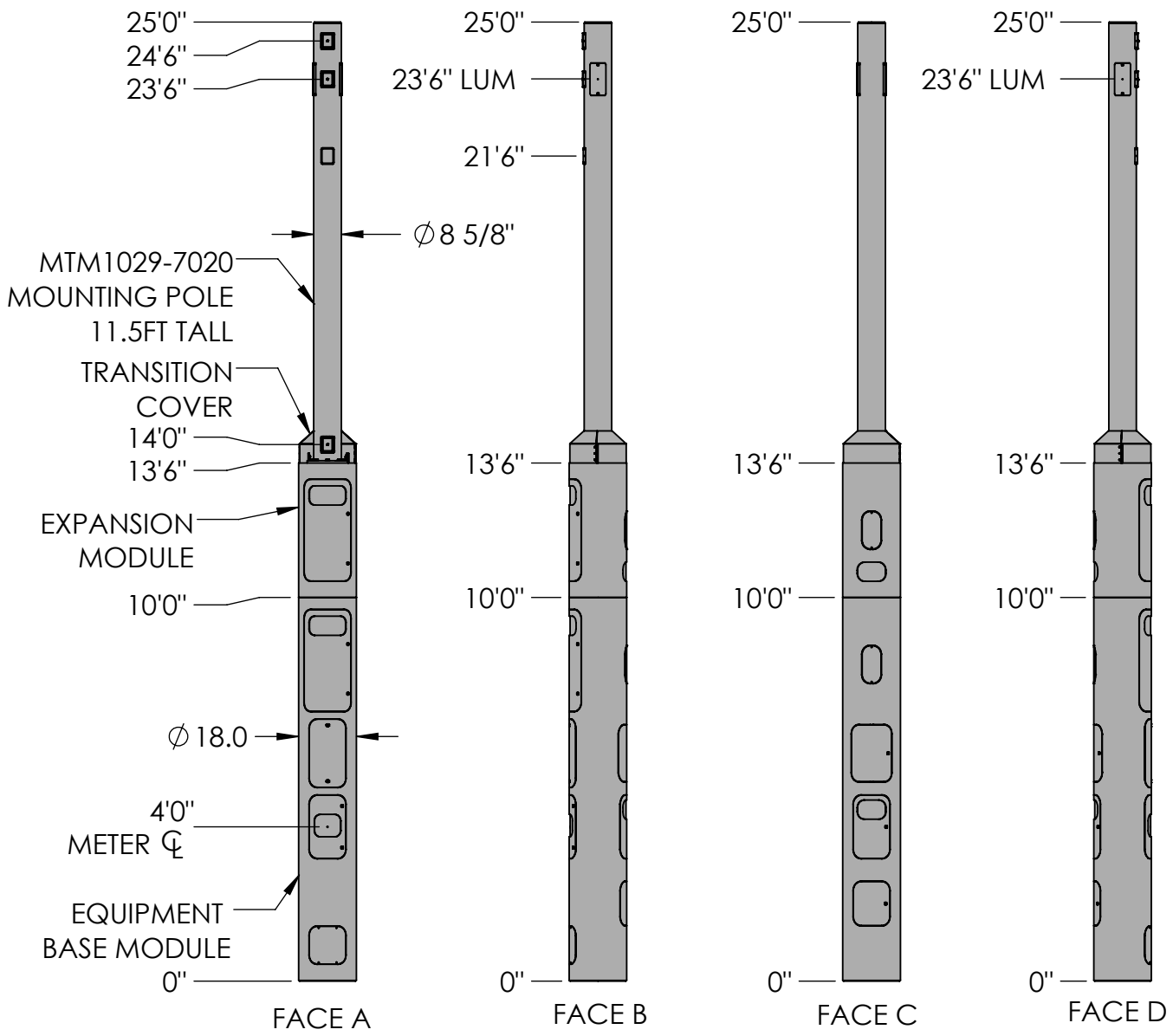

These drawings and specifications are the proprietary property of CommScope Inc. and may be used only for the specific purpose authorized in writing by CommScope Inc.

ALL DIMENSIONS ARE IN INCHES U.O.S.
TOLERANCES UNLESS OTHERWISE SPECIFIED:

.X = ±	.12	ANGLES	±2°
.XX = ±	.06	FRACTIONS	±1/32
.XXX= ±	.031		

REMOVE BURRS AND BREAK EDGES .005

DO NOT SCALE THIS PRINT

DRAWN BY: MJP	SHEET: 1 of 1	PART NUMBER: 760239946xx25Dx
CHECKED BY:	SCALE:	DESCRIPTION: METRO CELL, 18 IN INTEGRATED POLE SOLUTION
DATE:	MATERIAL:	DRAWING TYPE:
REVISION: B	FINISH:	ANDREW® an Amphenol company
	WEIGHT:	

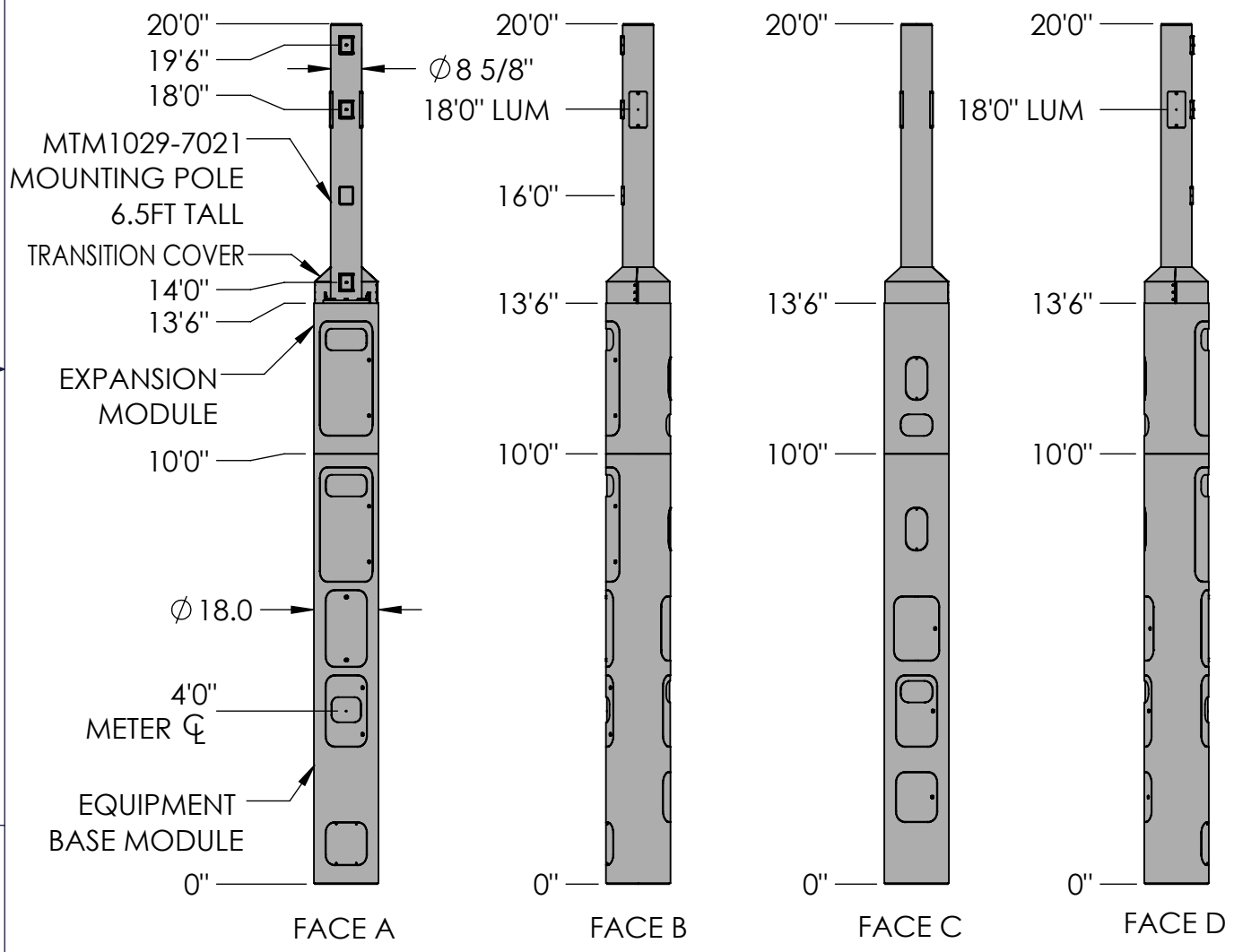

These drawings and specifications are the proprietary property of CommScope Inc. and may be used only for the specific purpose authorized in writing by CommScope Inc.

ALL DIMENSIONS ARE IN INCHES U.O.S.
TOLERANCES UNLESS OTHERWISE SPECIFIED:

.X = ±	.12	ANGLES	±2°
.XX = ±	.06	FRACTIONS	±1/32
.XXX= ±	.031		

REMOVE BURRS AND BREAK EDGES .005

DO NOT SCALE THIS PRINT

DRAWN BY: MJP	SHEET: 1 of 1	PART NUMBER: 760239946xx20Dx
CHECKED BY:	SCALE:	DESCRIPTION: METRO CELL, 18 IN INTEGRATED POLE SOLUTION
DATE:	MATERIAL:	DRAWING TYPE:
REVISION: B	FINISH:	ANDREW an Amphenol company
	WEIGHT:	

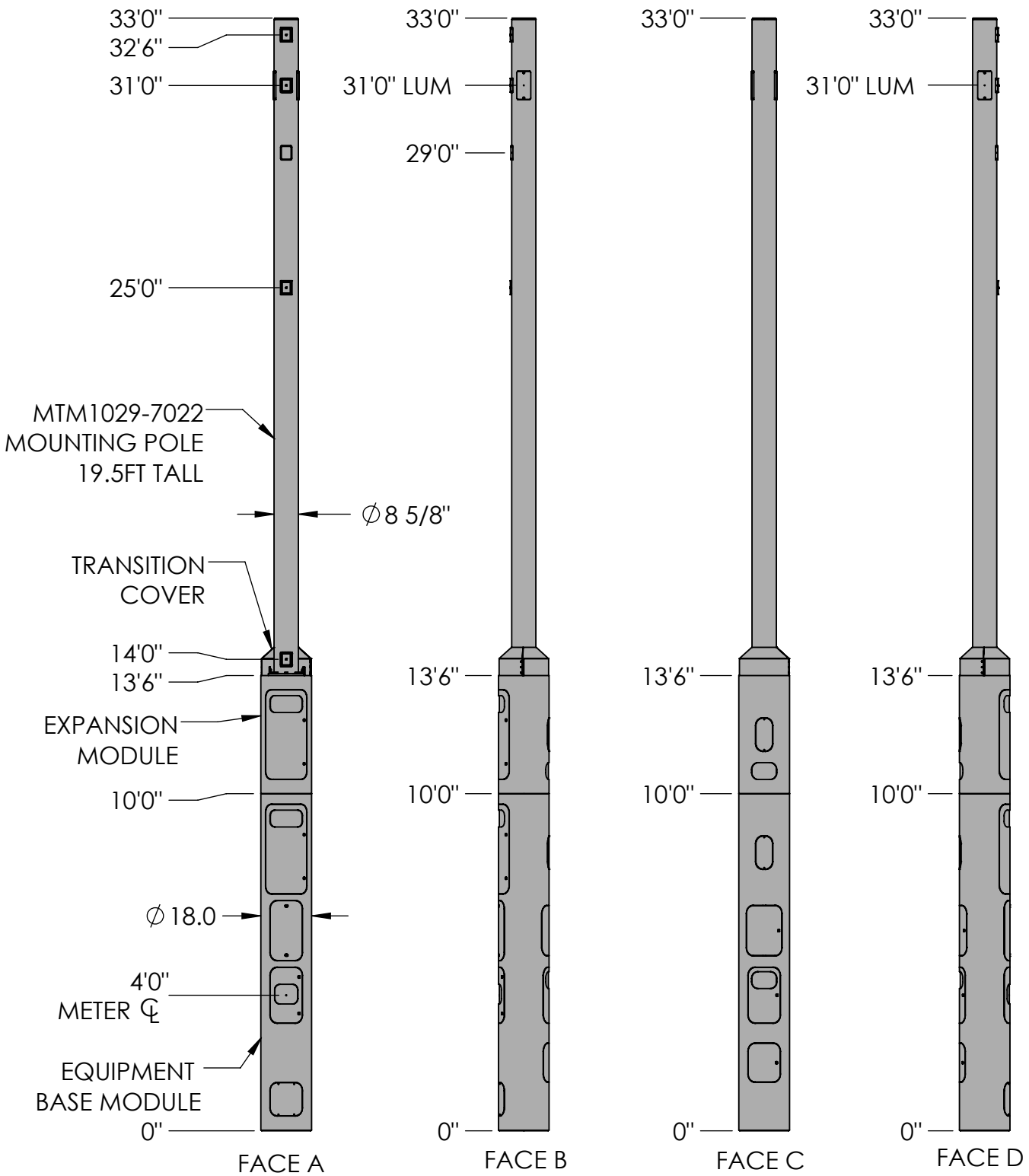

These drawings and specifications are the proprietary property of CommScope Inc. and may be used only for the specific purpose authorized in writing by CommScope Inc.

ALL DIMENSIONS ARE IN INCHES U.O.S.
TOLERANCES UNLESS OTHERWISE SPECIFIED:

.X = ±	.12	ANGLES	±2°
.XX = ±	.06	FRACTIONS	±1/32
.XXX= ±	.031		

REMOVE BURRS AND BREAK EDGES .005

DO NOT SCALE THIS PRINT

DRAWN BY: MJP	SHEET: 1 of 1	PART NUMBER: 760239946xx33Dx	
CHECKED BY:	SCALE:	DESCRIPTION: METRO CELL, 18 IN INTEGRATED POLE SOLUTION	
DATE:	MATERIAL:	DRAWING TYPE:	
REVISION: B	FINISH:	ANDREW. an Amphenol company	
	WEIGHT:		

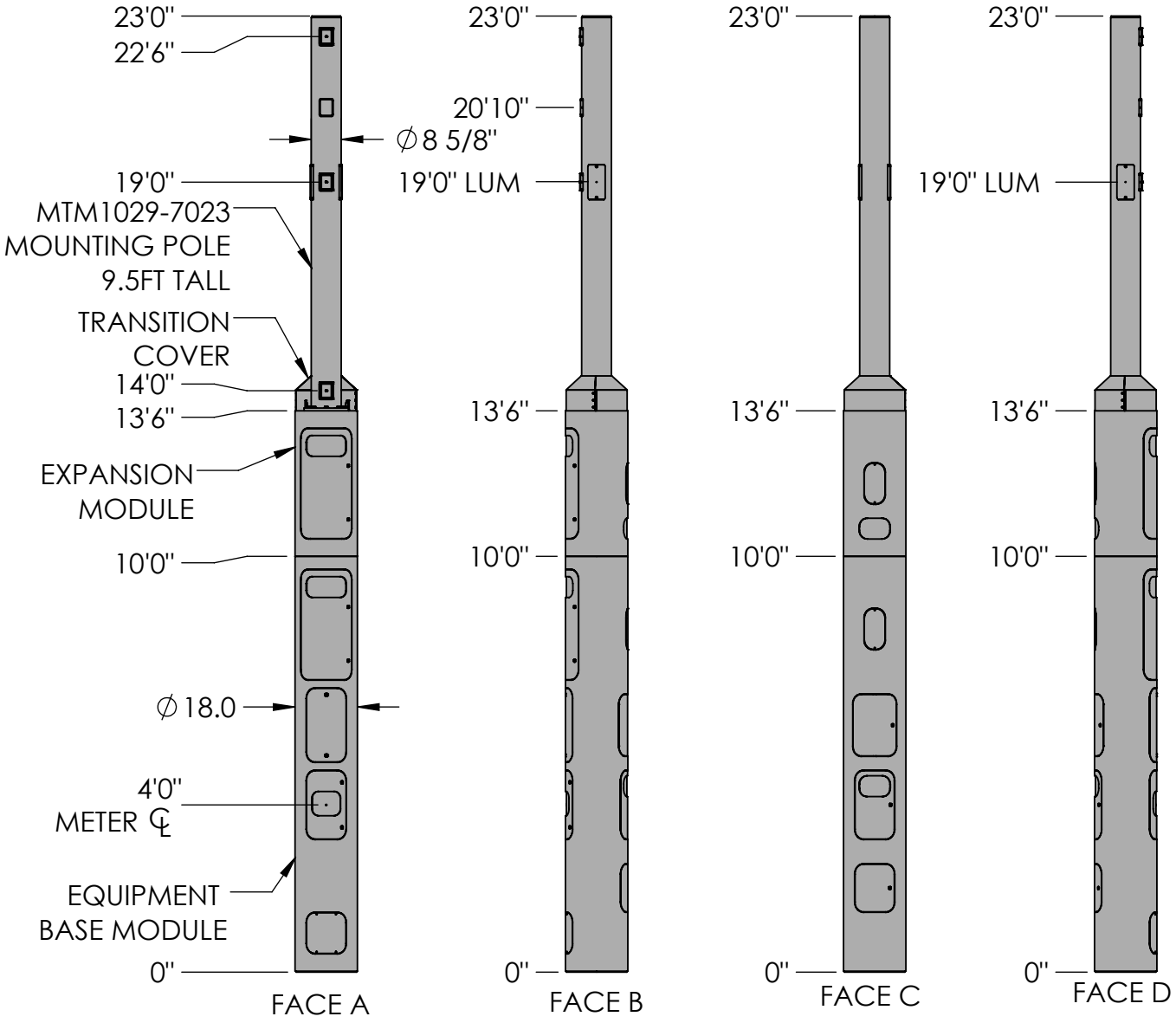

These drawings and specifications are the proprietary property of CommScope Inc. and may be used only for the specific purpose authorized in writing by CommScope Inc.

ALL DIMENSIONS ARE IN INCHES U.O.S.
TOLERANCES UNLESS OTHERWISE SPECIFIED:

.X = ±	.12	ANGLES	±2°
.XX = ±	.06	FRACTIONS	±1/32
.XXX= ±	.031		

REMOVE BURRS AND BREAK EDGES .005

DO NOT SCALE THIS PRINT

DRAWN BY: MJP	SHEET: 1 of 1	PART NUMBER: 760239946xx23Dx
CHECKED BY:	SCALE:	DESCRIPTION: METRO CELL, 18 IN INTEGRATED POLE SOLUTION
DATE:	MATERIAL:	DRAWING TYPE:
REVISION: B	FINISH:	ANDREW an Amphenol company
	WEIGHT:	

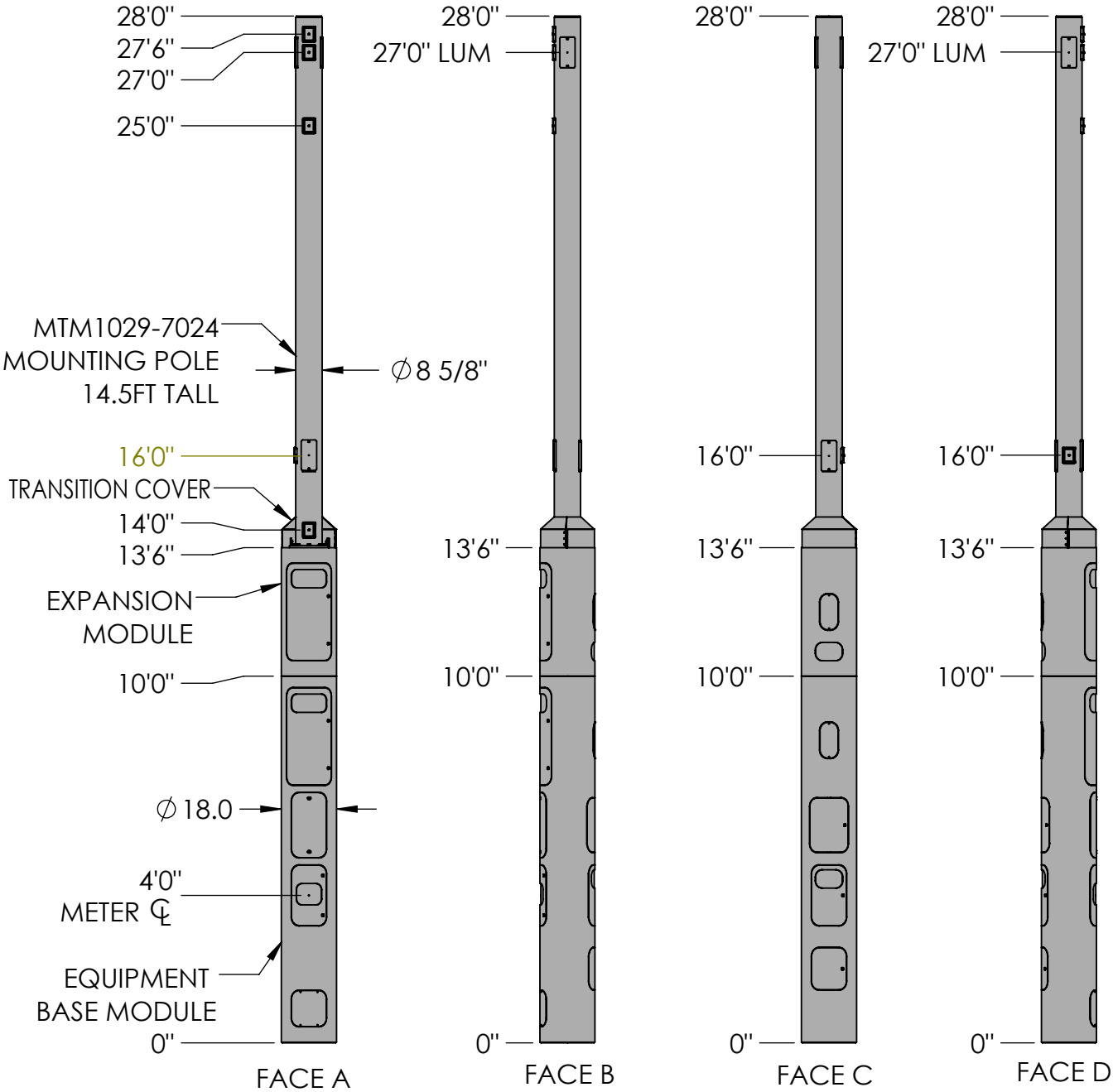

These drawings and specifications are the proprietary property of CommScope Inc. and may be used only for the specific purpose authorized in writing by CommScope Inc.

ALL DIMENSIONS ARE IN INCHES U.O.S.
TOLERANCES UNLESS OTHERWISE SPECIFIED:

.X = ±	.12	ANGLES	±2°
.XX = ±	.06	FRACTIONS	±1/32
.XXX= ±	.031		

REMOVE BURRS AND BREAK EDGES .005

DO NOT SCALE THIS PRINT

DRAWN BY: MJP	SHEET: 1 of 1	PART NUMBER: 760239946xx28Dx
CHECKED BY:	SCALE:	DESCRIPTION: METRO CELL, 18 IN INTEGRATED POLE SOLUTION
DATE:	MATERIAL:	DRAWING TYPE:
REVISION: B	FINISH:	ANDREW. an Amphenol company
	WEIGHT:	