REVISIONS			
REV.	DESCRIPTION	BY	DATE
B	UPDATED FORMAT	MJP	09/22/26

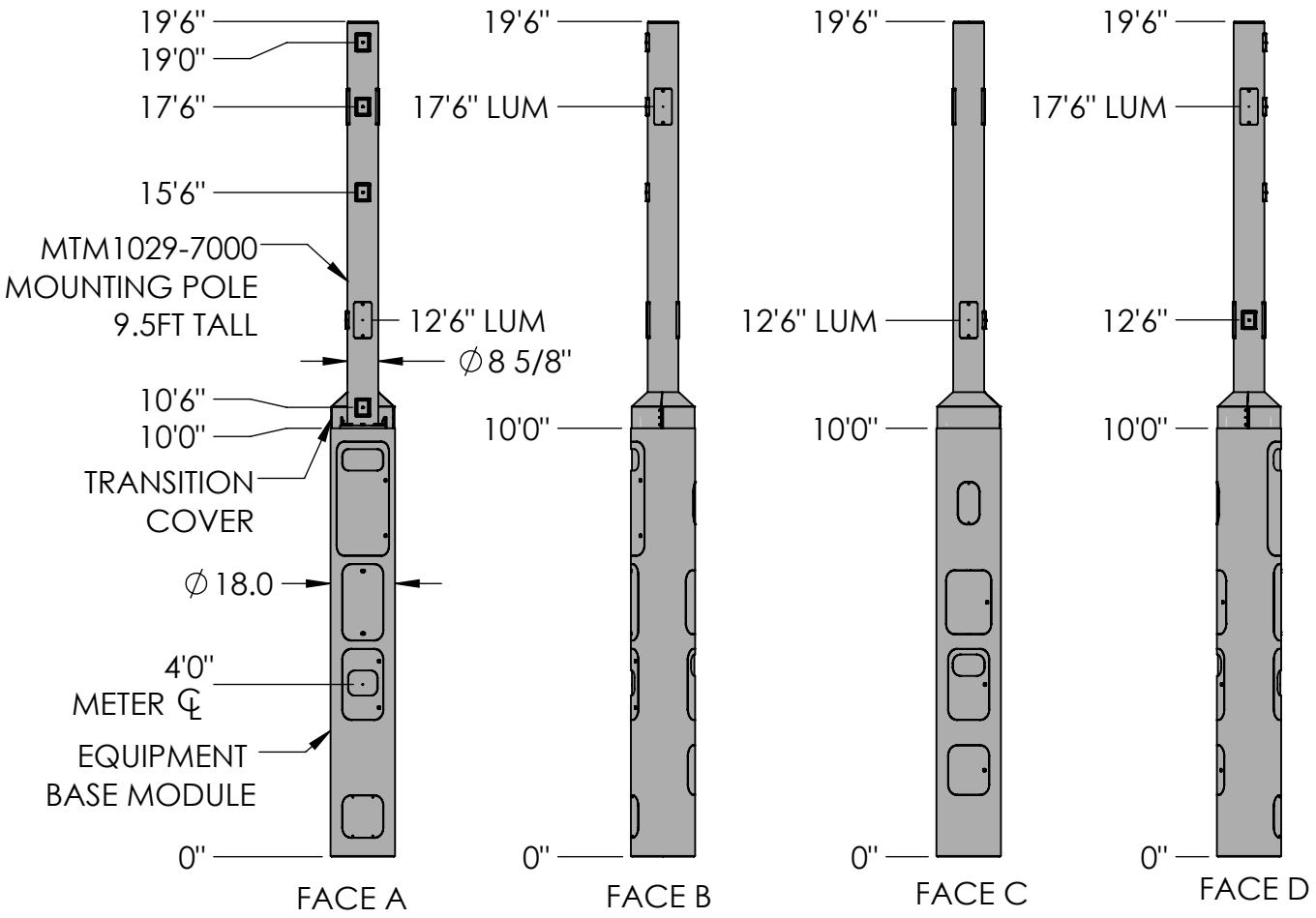

These drawings and specifications are the proprietary property of CommScope Inc. and may be used only for the specific purpose authorized in writing by CommScope Inc.

ALL DIMENSIONS ARE IN INCHES U.O.S.
TOLERANCES UNLESS OTHERWISE SPECIFIED:

.X = ±	.12	ANGLES	±2°
.XX = ±	.06	FRACTIONS	±1/32
.XXX= ±	.031		

REMOVE BURRS AND BREAK EDGES .005

DO NOT SCALE THIS PRINT

DRAWN BY: MJP	SHEET: 1 of 1	PART NUMBER: 760239946xx20xx
CHECKED BY:	SCALE:	DESCRIPTION: METRO CELL, 18 IN INTEGRATED POLE SOLUTION
DATE:	MATERIAL:	DRAWING TYPE:
REVISION: B	FINISH:	ANDREW an Amphenol company
	WEIGHT:	

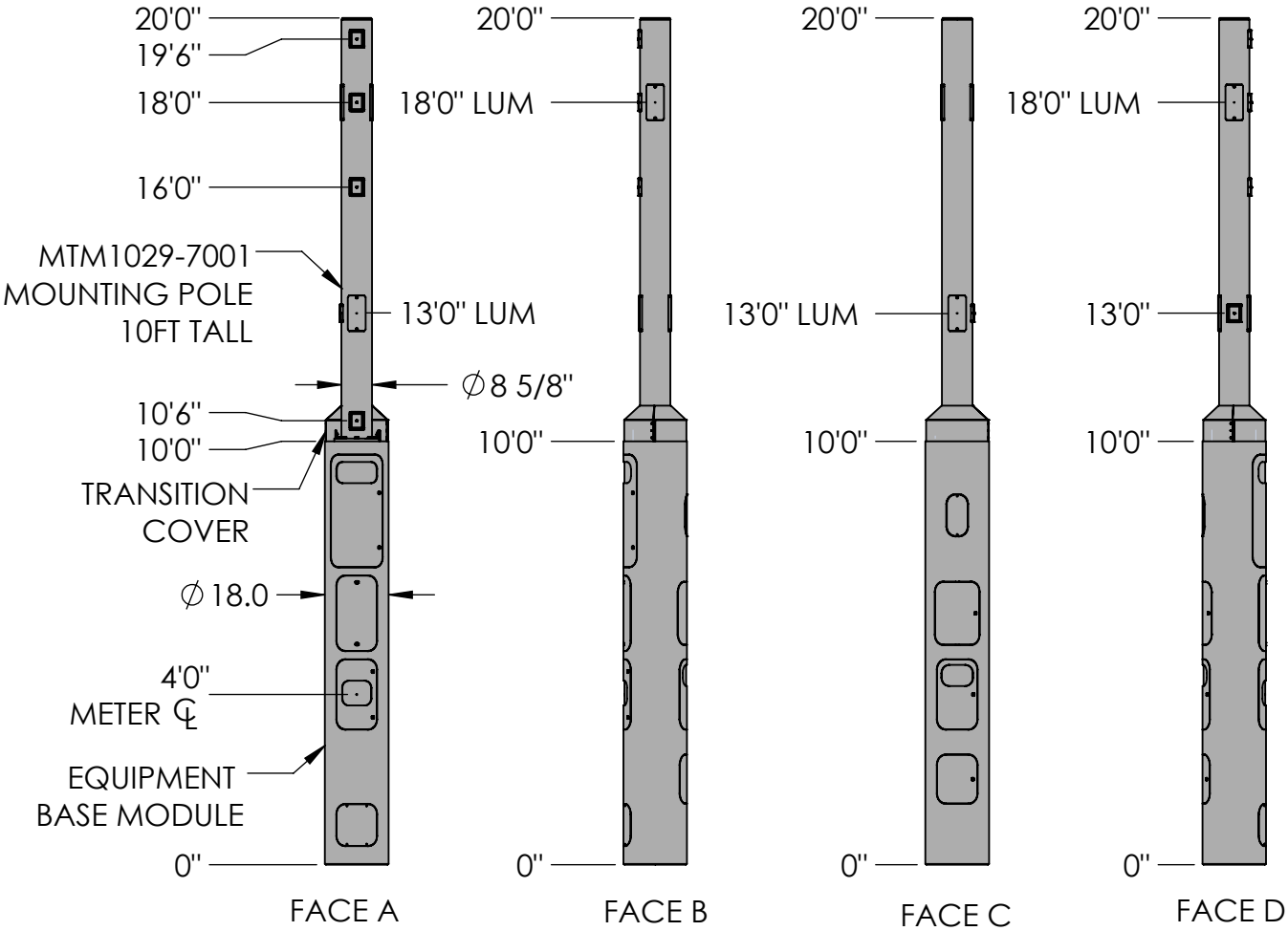

These drawings and specifications are the proprietary property of CommScope Inc. and may be used only for the specific purpose authorized in writing by CommScope Inc.

ALL DIMENSIONS ARE IN INCHES U.O.S.
TOLERANCES UNLESS OTHERWISE SPECIFIED:

.X = ±	.12	ANGLES	±2°
.XX = ±	.06	FRACTIONS	±1/32
.XXX= ±	.031		

REMOVE BURRS AND BREAK EDGES .005

DO NOT SCALE THIS PRINT

DRAWN BY: MJP	SHEET: 1 of 1	PART NUMBER: 760239946xx20xx
CHECKED BY:	SCALE:	DESCRIPTION: METRO CELL, 18 IN INTEGRATED POLE SOLUTION
DATE:	MATERIAL:	DRAWING TYPE:
REVISION: B	FINISH:	ANDREW an Amphenol company
	WEIGHT:	

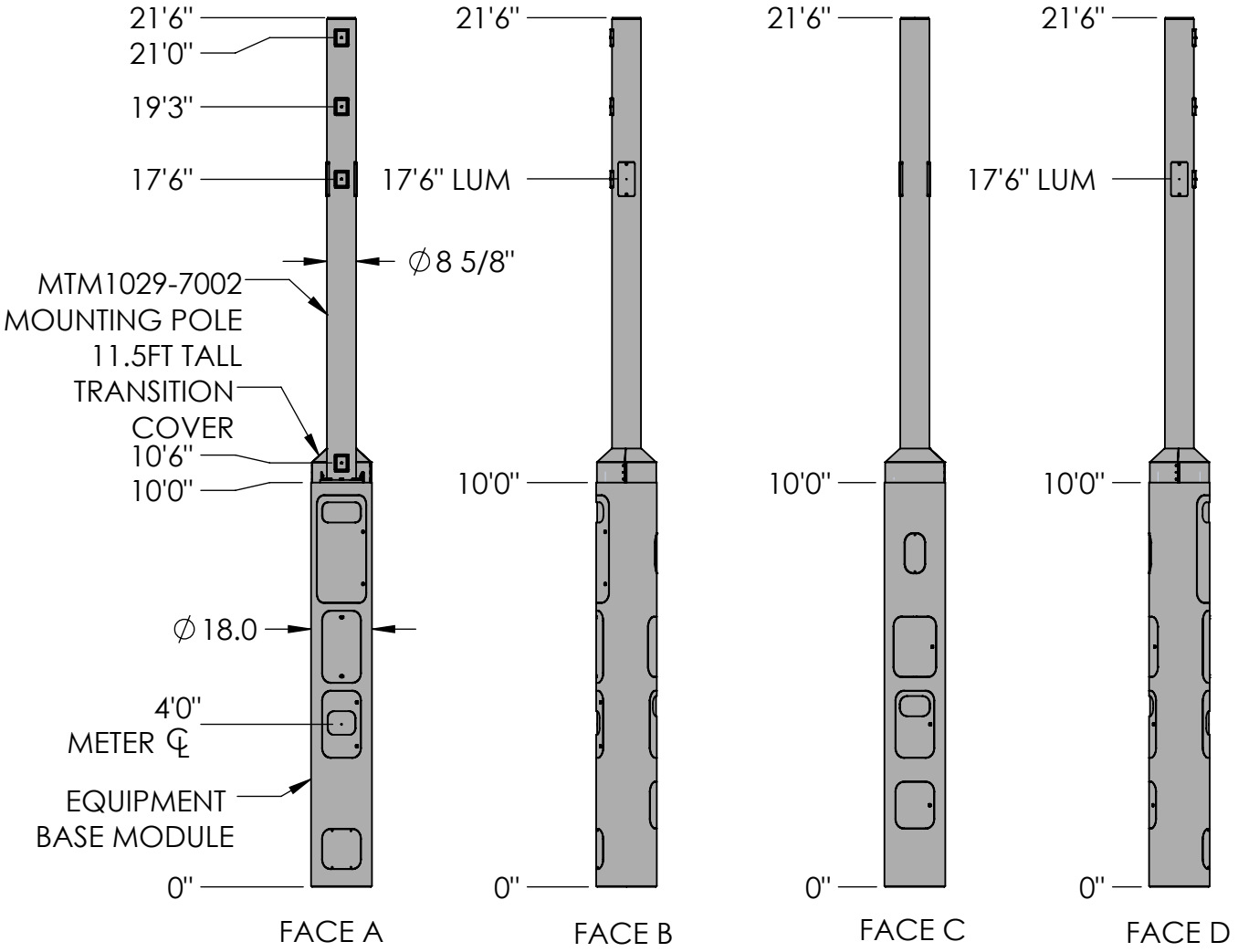

These drawings and specifications are the proprietary property of CommScope Inc. and may be used only for the specific purpose authorized in writing by CommScope Inc.

ALL DIMENSIONS ARE IN INCHES U.O.S.
TOLERANCES UNLESS OTHERWISE SPECIFIED:

.X = ±	.12	ANGLES	±2°
.XX = ±	.06	FRACTIONS	±1/32
.XXX= ±	.031		

REMOVE BURRS AND BREAK EDGES .005

DO NOT SCALE THIS PRINT

DRAWN BY: MJP	SHEET: 1 of 1	PART NUMBER: 760239946xx22xx
CHECKED BY:	SCALE:	DESCRIPTION: METRO CELL, 18 IN INTEGRATED POLE SOLUTION
DATE:	MATERIAL:	DRAWING TYPE:
REVISION: B	FINISH:	ANDREW an Amphenol company
	WEIGHT:	

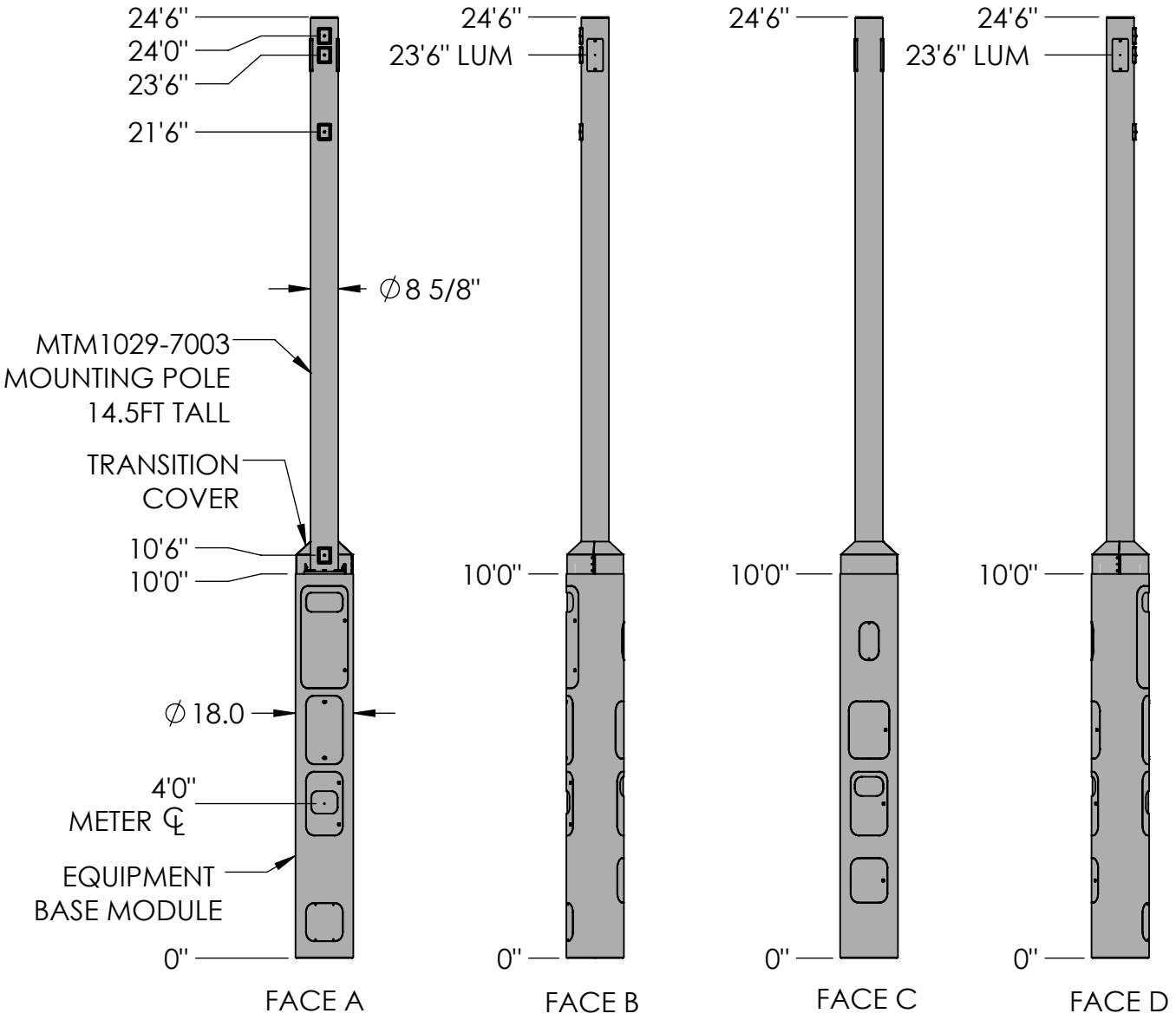

These drawings and specifications are the proprietary property of CommScope Inc. and may be used only for the specific purpose authorized in writing by CommScope Inc.

ALL DIMENSIONS ARE IN INCHES U.O.S.
TOLERANCES UNLESS OTHERWISE SPECIFIED:

.X = ±	.12	ANGLES	±2°
.XX = ±	.06	FRACTIONS	±1/32
.XXX= ±	.031		

REMOVE BURRS AND BREAK EDGES .005

DO NOT SCALE THIS PRINT

DRAWN BY: MJP	SHEET: 1 of 1	PART NUMBER: 760239946xx25xx
CHECKED BY:	SCALE:	DESCRIPTION: METRO CELL, 18 IN INTEGRATED POLE SOLUTION
DATE:	MATERIAL:	DRAWING TYPE:
REVISION: B	FINISH:	ANDREW an Amphenol company
	WEIGHT:	

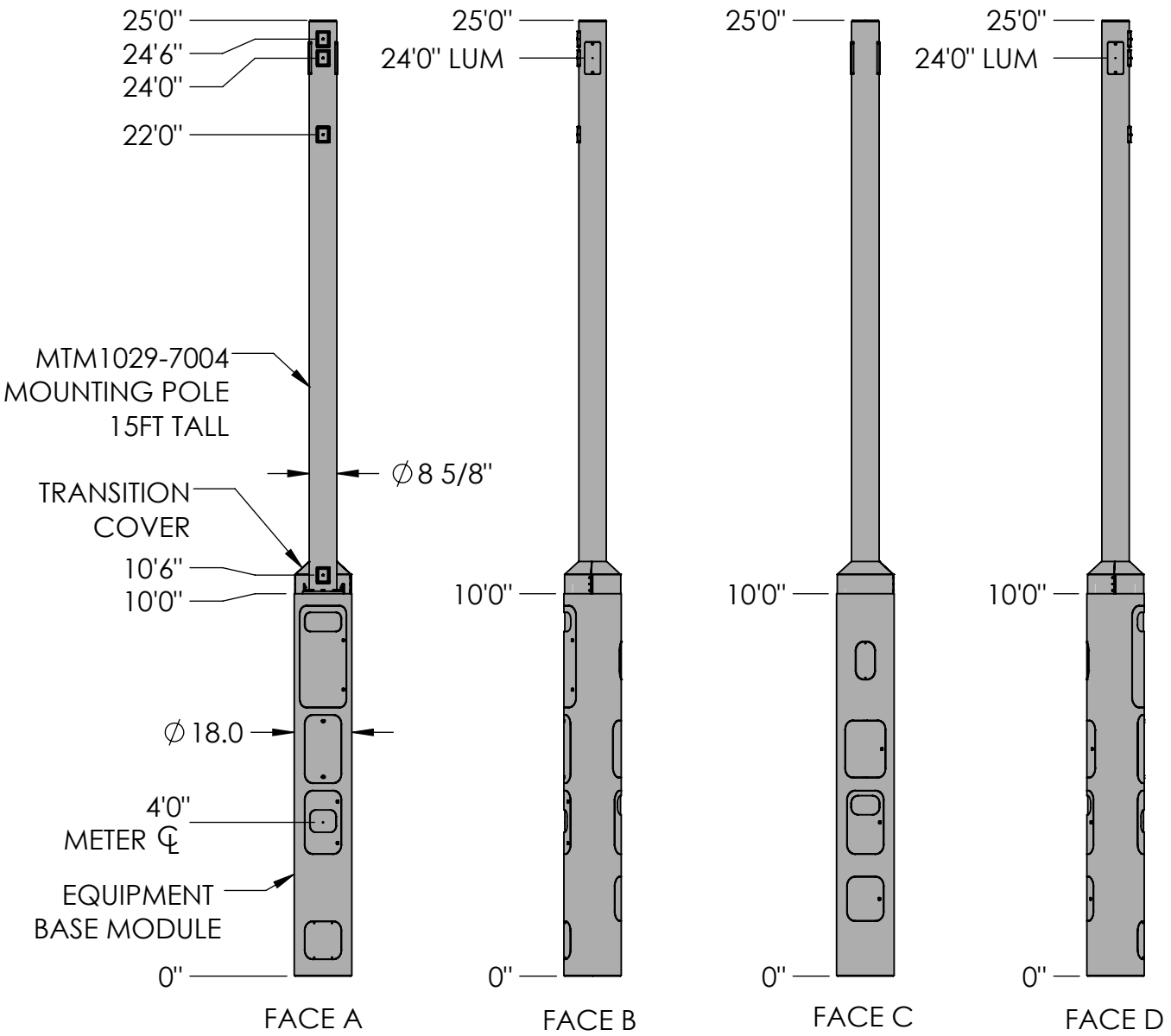

These drawings and specifications are the proprietary property of CommScope Inc. and may be used only for the specific purpose authorized in writing by CommScope Inc.

ALL DIMENSIONS ARE IN INCHES U.O.S.
TOLERANCES UNLESS OTHERWISE SPECIFIED:

.X = ±	.12	ANGLES	±2°
.XX = ±	.06	FRACTIONS	±1/32
.XXX= ±	.031		

REMOVE BURRS AND BREAK EDGES .005

DO NOT SCALE THIS PRINT

DRAWN BY: MJP	SHEET: 1 of 1	PART NUMBER: 760239946xx25xx
CHECKED BY:	SCALE:	DESCRIPTION: METRO CELL, 18 IN INTEGRATED POLE SOLUTION
DATE:	MATERIAL:	DRAWING TYPE:
REVISION: B	FINISH:	ANDREW, an Amphenol company
	WEIGHT:	

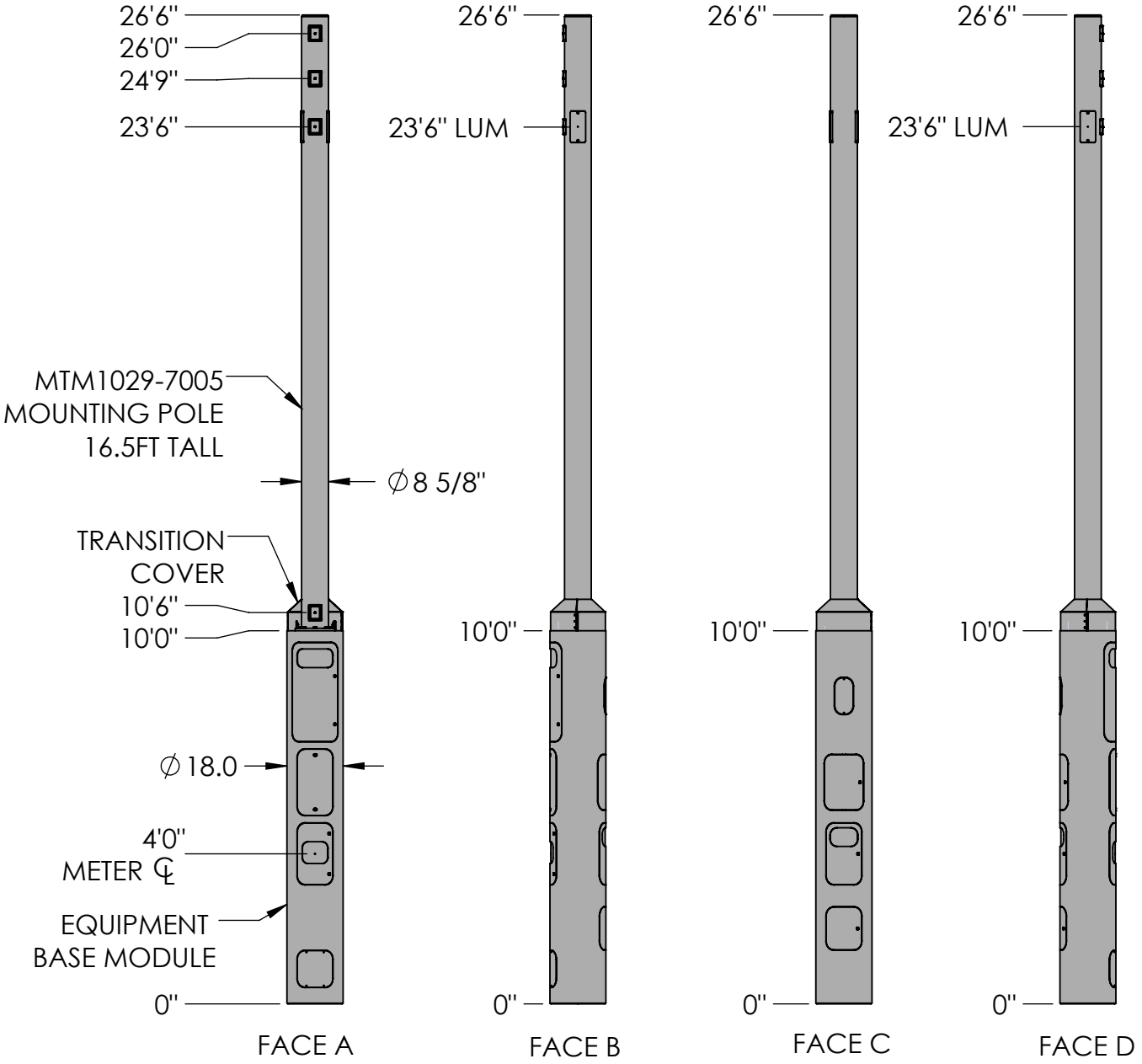

These drawings and specifications are the proprietary property of CommScope Inc. and may be used only for the specific purpose authorized in writing by CommScope Inc.

ALL DIMENSIONS ARE IN INCHES U.O.S.
TOLERANCES UNLESS OTHERWISE SPECIFIED:

.X = ±	.12	ANGLES	±2°
.XX = ±	.06	FRACTIONS	±1/32
.XXX= ±	.031		

REMOVE BURRS AND BREAK EDGES .005

DO NOT SCALE THIS PRINT

DRAWN BY: MJP	SHEET: 1 of 1	PART NUMBER: 760239946xx27xx
CHECKED BY:	SCALE:	DESCRIPTION: METRO CELL, 18 IN INTEGRATED POLE SOLUTION
DATE:	MATERIAL:	DRAWING TYPE:
REVISION: B	FINISH:	ANDREW an Amphenol company
	WEIGHT:	

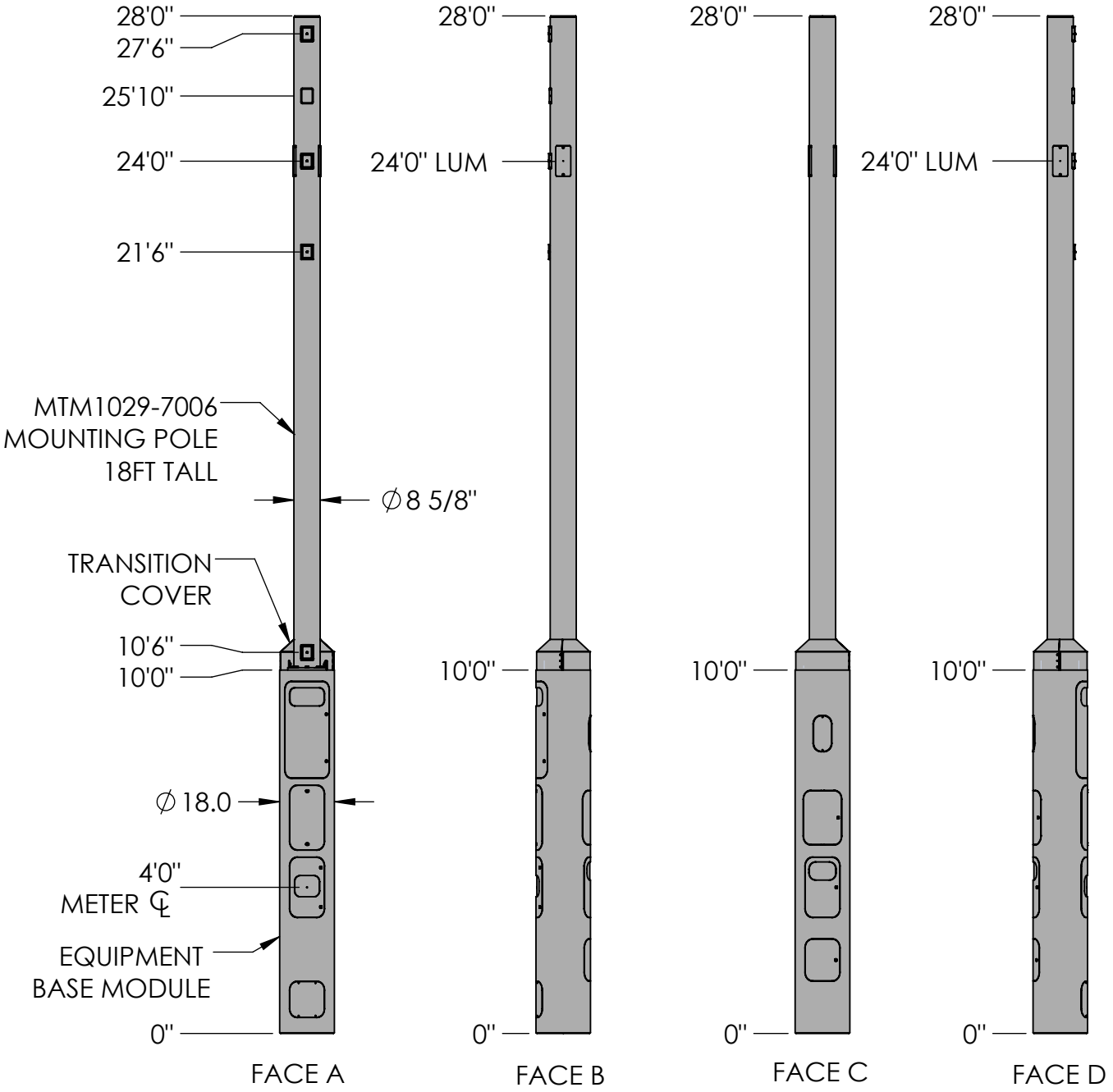

These drawings and specifications are the proprietary property of CommScope Inc. and may be used only for the specific purpose authorized in writing by CommScope Inc.

ALL DIMENSIONS ARE IN INCHES U.O.S.
TOLERANCES UNLESS OTHERWISE SPECIFIED:

.X = ±	.12	ANGLES	±2°
.XX = ±	.06	FRACTIONS	±1/32
.XXX= ±	.031		

REMOVE BURRS AND BREAK EDGES .005

DO NOT SCALE THIS PRINT

DRAWN BY: MJP	SHEET: 1 of 1	PART NUMBER: 760239946xx28xx
CHECKED BY:	SCALE:	DESCRIPTION: METRO CELL, 18 IN INTEGRATED POLE SOLUTION
DATE:	MATERIAL:	DRAWING TYPE:
REVISION: B	FINISH:	ANDREW an Amphenol company
	WEIGHT:	

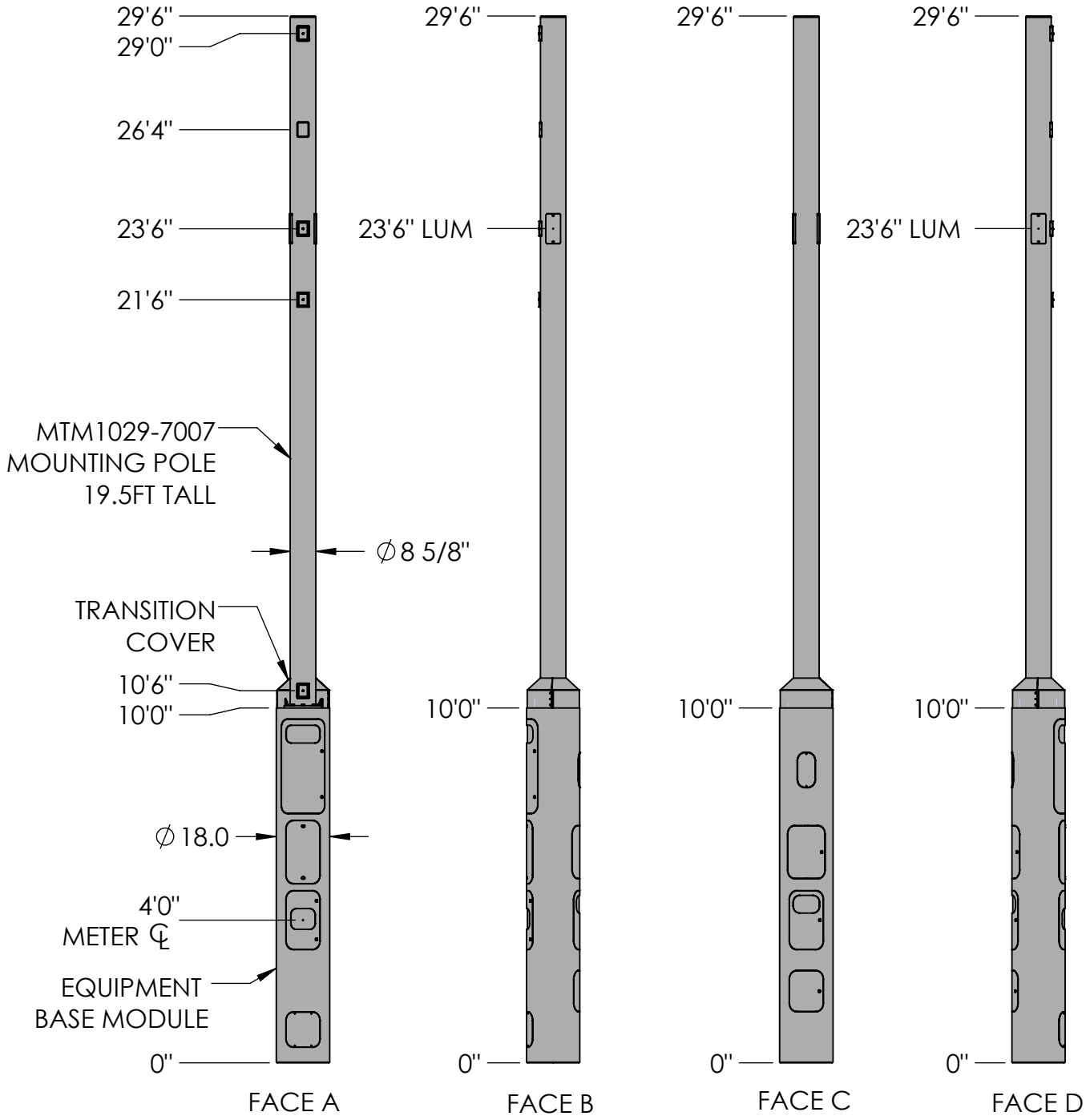

These drawings and specifications are the proprietary property of CommScope Inc. and may be used only for the specific purpose authorized in writing by CommScope Inc.

ALL DIMENSIONS ARE IN INCHES U.O.S.
TOLERANCES UNLESS OTHERWISE SPECIFIED:

.X = ±	.12	ANGLES	±2°
.XX = ±	.06	FRACTIONS	±1/32
.XXX= ±	.031		

REMOVE BURRS AND BREAK EDGES .005

DO NOT SCALE THIS PRINT

DRAWN BY: MJP	SHEET: 1 of 1	PART NUMBER: 760239946xx30xx
CHECKED BY:	SCALE:	DESCRIPTION: METRO CELL, 18 IN INTEGRATED POLE SOLUTION
DATE:	MATERIAL:	DRAWING TYPE:
REVISION: B	FINISH:	ANDREW an Amphenol company
	WEIGHT:	

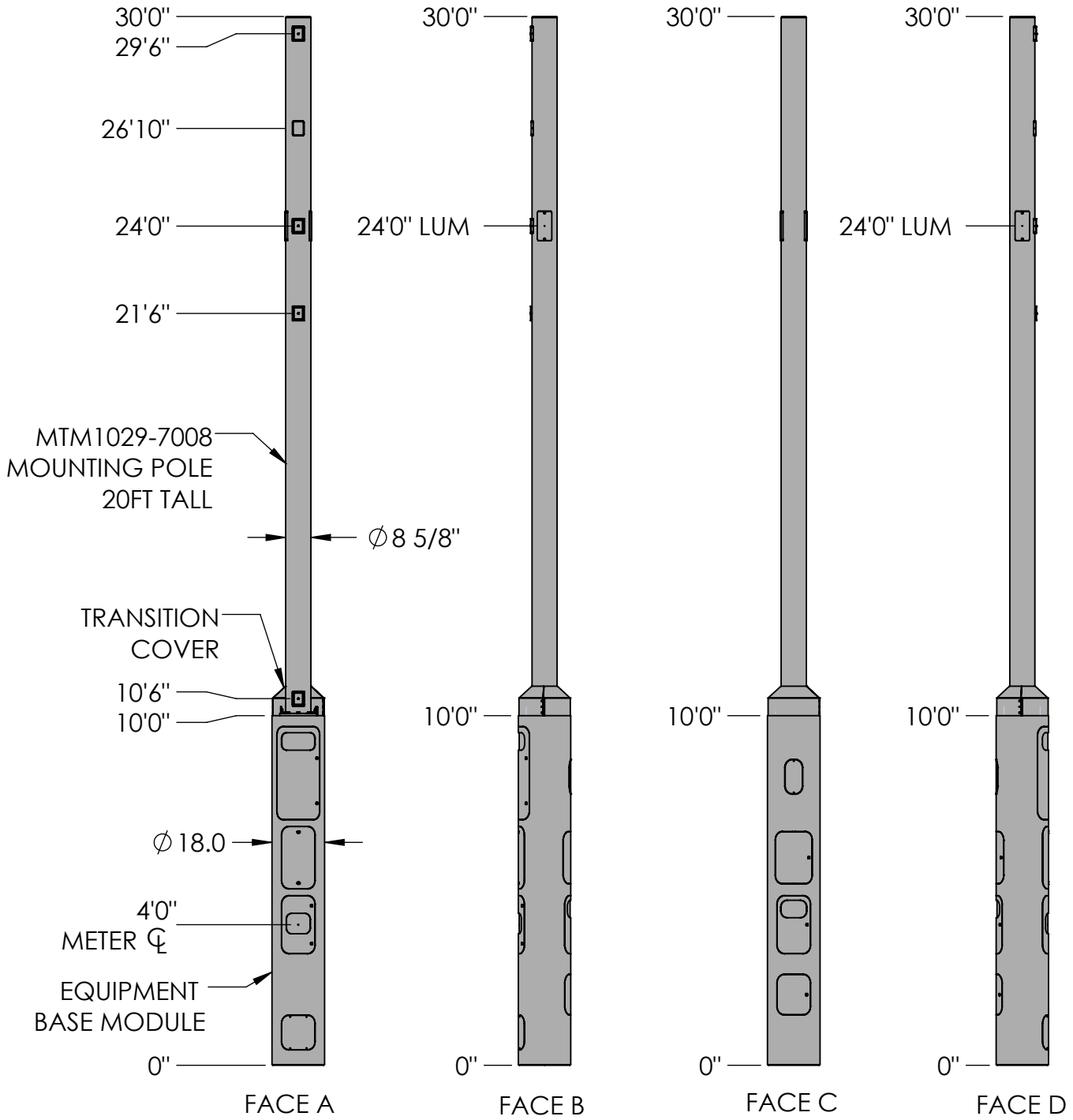

These drawings and specifications are the proprietary property of CommScope Inc. and may be used only for the specific purpose authorized in writing by CommScope Inc.

ALL DIMENSIONS ARE IN INCHES U.O.S.
TOLERANCES UNLESS OTHERWISE SPECIFIED:

.X = ±	.12	ANGLES	±2°
.XX = ±	.06	FRACTIONS	±1/32
.XXX= ±	.031		

REMOVE BURRS AND BREAK EDGES .005

DO NOT SCALE THIS PRINT

DRAWN BY: MJP	SHEET: 1 of 1	PART NUMBER: 760239946xx30xx
CHECKED BY:	SCALE:	DESCRIPTION: METRO CELL, 18 IN INTEGRATED POLE SOLUTION
DATE:	MATERIAL:	DRAWING TYPE:
REVISION: B	FINISH:	ANDREW. an Amphenol company
	WEIGHT:	

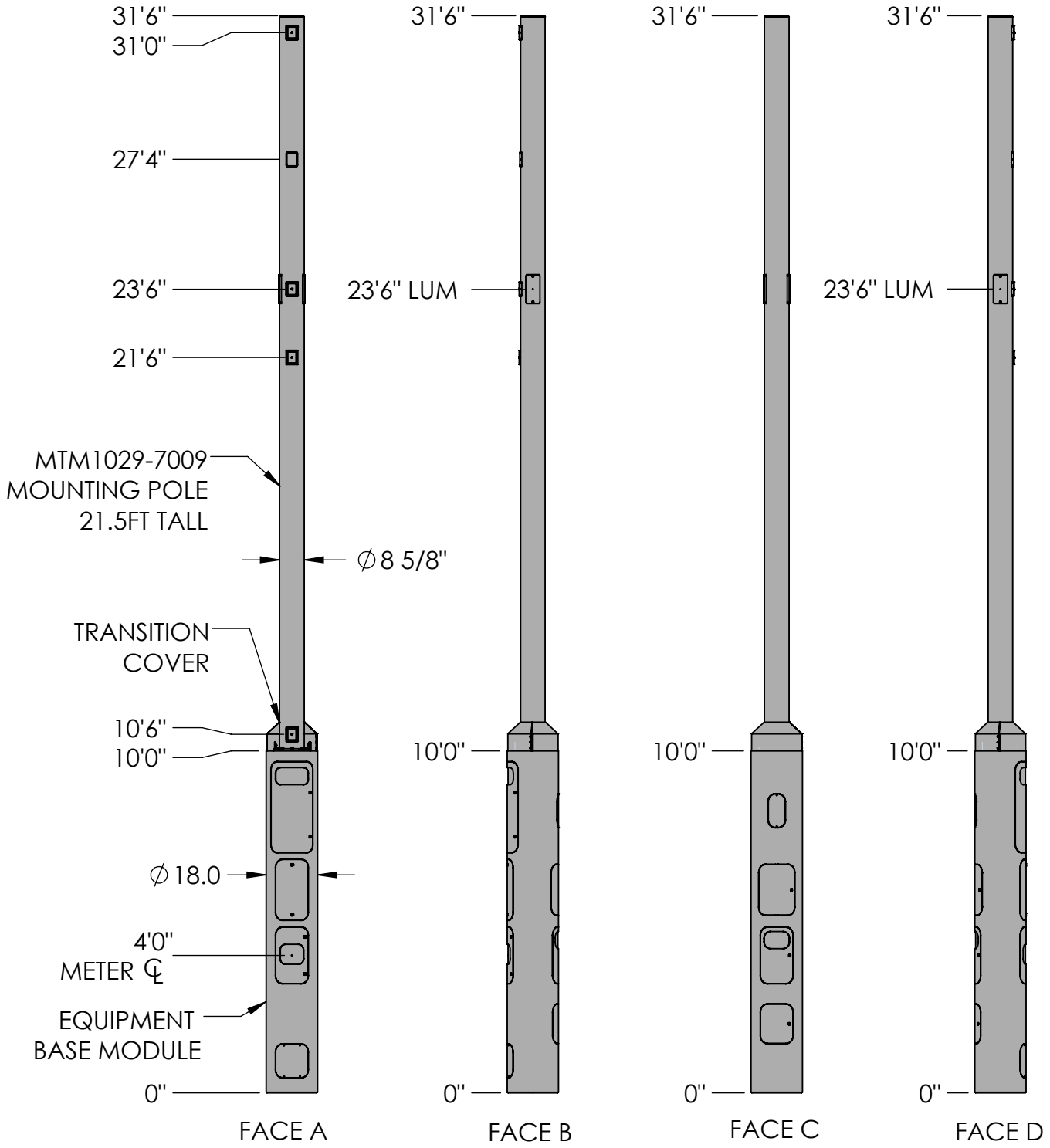

These drawings and specifications are the proprietary property of CommScope Inc. and may be used only for the specific purpose authorized in writing by CommScope Inc.

ALL DIMENSIONS ARE IN INCHES U.O.S.
TOLERANCES UNLESS OTHERWISE SPECIFIED:

.X = ±	.12	ANGLES	±2°
.XX = ±	.06	FRACTIONS	±1/32
.XXX= ±	.031		

REMOVE BURRS AND BREAK EDGES .005

DO NOT SCALE THIS PRINT

DRAWN BY: MJP	SHEET: 1 of 1	PART NUMBER: 760239946xx32xx
CHECKED BY:	SCALE:	DESCRIPTION: METRO CELL, 18 IN INTEGRATED POLE SOLUTION
DATE:	MATERIAL:	DRAWING TYPE:
REVISION: B	FINISH:	ANDREW an Amphenol company
	WEIGHT:	

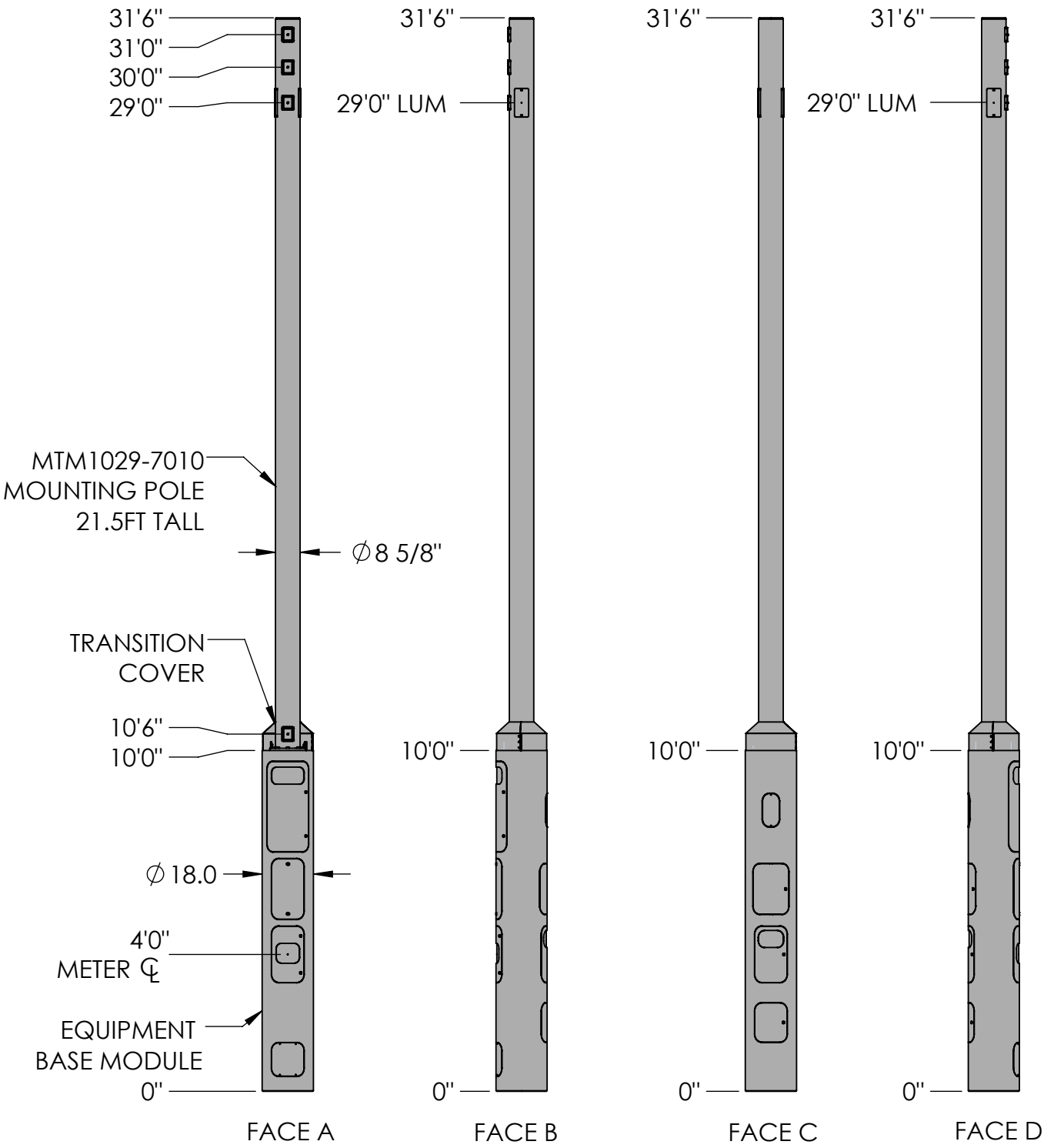

These drawings and specifications are the proprietary property of CommScope Inc. and may be used only for the specific purpose authorized in writing by CommScope Inc.

ALL DIMENSIONS ARE IN INCHES U.O.S.
TOLERANCES UNLESS OTHERWISE SPECIFIED:

.X = ±	.12	ANGLES	±2°
.XX = ±	.06	FRACTIONS	±1/32
.XXX= ±	.031		

REMOVE BURRS AND BREAK EDGES .005

DO NOT SCALE THIS PRINT

DRAWN BY: MJP	SHEET: 1 of 1	PART NUMBER: 760239946xx32xx
CHECKED BY:	SCALE:	DESCRIPTION: METRO CELL, 18 IN INTEGRATED POLE SOLUTION
DATE:	MATERIAL:	DRAWING TYPE:
REVISION: B	FINISH:	ANDREW an Amphenol company
	WEIGHT:	

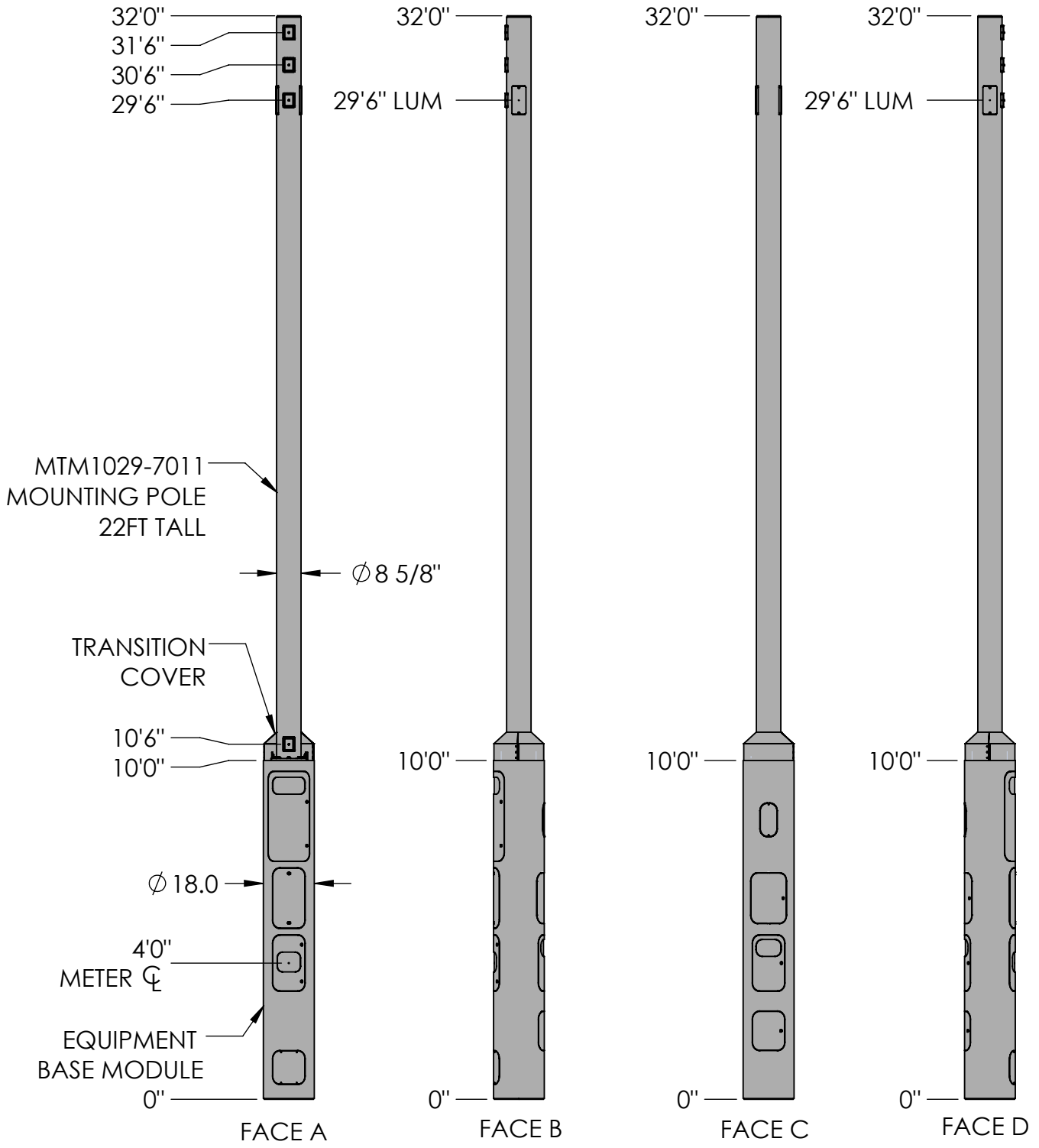

These drawings and specifications are the proprietary property of CommScope Inc. and may be used only for the specific purpose authorized in writing by CommScope Inc.

ALL DIMENSIONS ARE IN INCHES U.O.S.
TOLERANCES UNLESS OTHERWISE SPECIFIED:

.X = ±	.12	ANGLES	±2°
.XX = ±	.06	FRACTIONS	±1/32
.XXX= ±	.031		

REMOVE BURRS AND BREAK EDGES .005

DO NOT SCALE THIS PRINT

DRAWN BY: MJP	SHEET: 1 of 1	PART NUMBER: 760239946xx32xx
CHECKED BY:	SCALE:	DESCRIPTION: METRO CELL, 18 IN INTEGRATED POLE SOLUTION
DATE:	MATERIAL:	DRAWING TYPE:
REVISION: B	FINISH:	ANDREW an Amphenol company
	WEIGHT:	

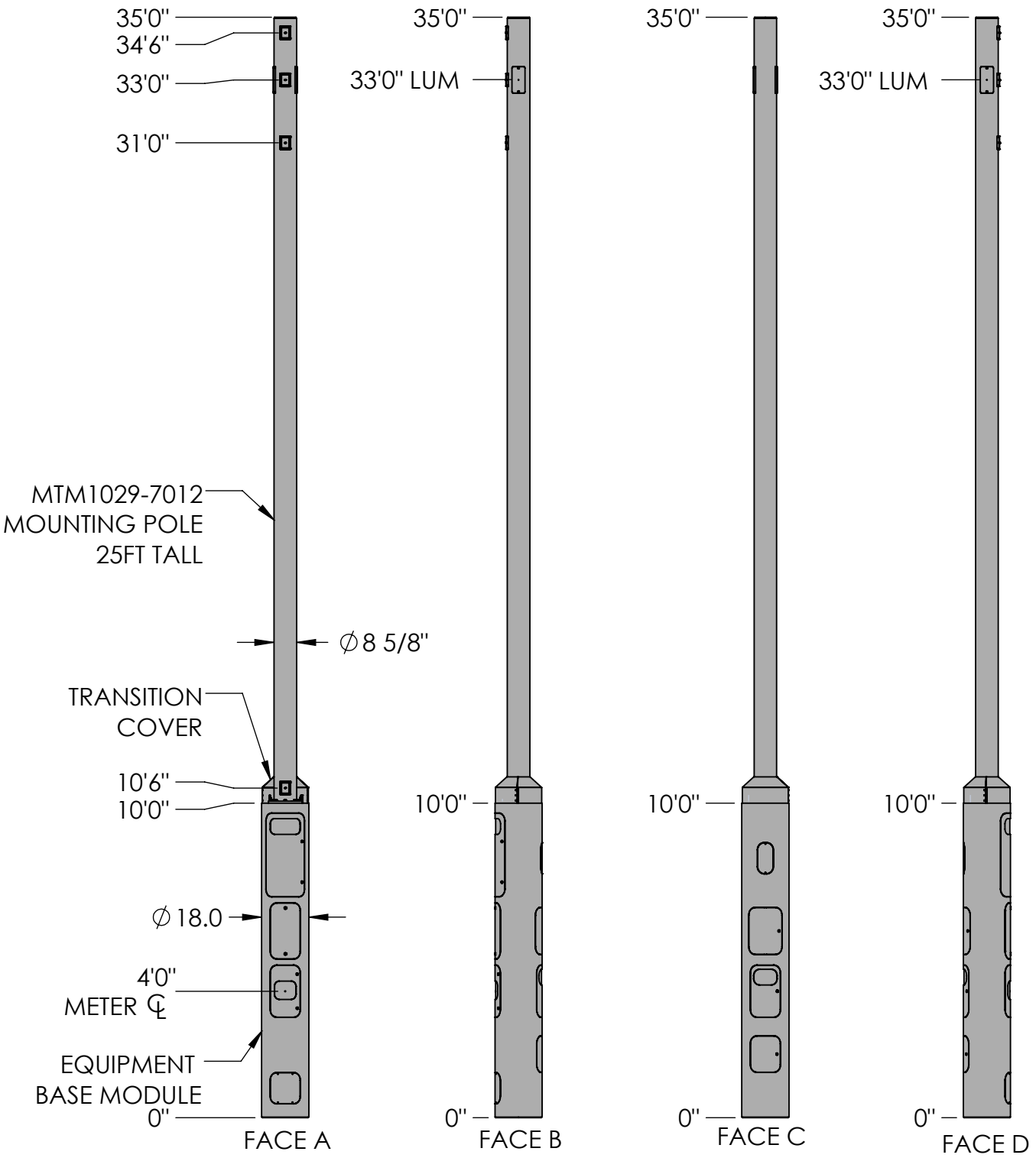

These drawings and specifications are the proprietary property of CommScope Inc. and may be used only for the specific purpose authorized in writing by CommScope Inc.

ALL DIMENSIONS ARE IN INCHES U.O.S.
TOLERANCES UNLESS OTHERWISE SPECIFIED:

.X = ±	.12	ANGLES	±2°
.XX = ±	.06	FRACTIONS	±1/32
.XXX= ±	.031		

REMOVE BURRS AND BREAK EDGES .005

DO NOT SCALE THIS PRINT

DRAWN BY: MJP	SHEET: 1 of 1	PART NUMBER: 760239946xx35xx
CHECKED BY:	SCALE:	DESCRIPTION: METRO CELL, 18 IN INTEGRATED POLE SOLUTION
DATE:	MATERIAL:	DRAWING TYPE:
REVISION: B	FINISH:	ANDREW an Amphenol company
	WEIGHT:	

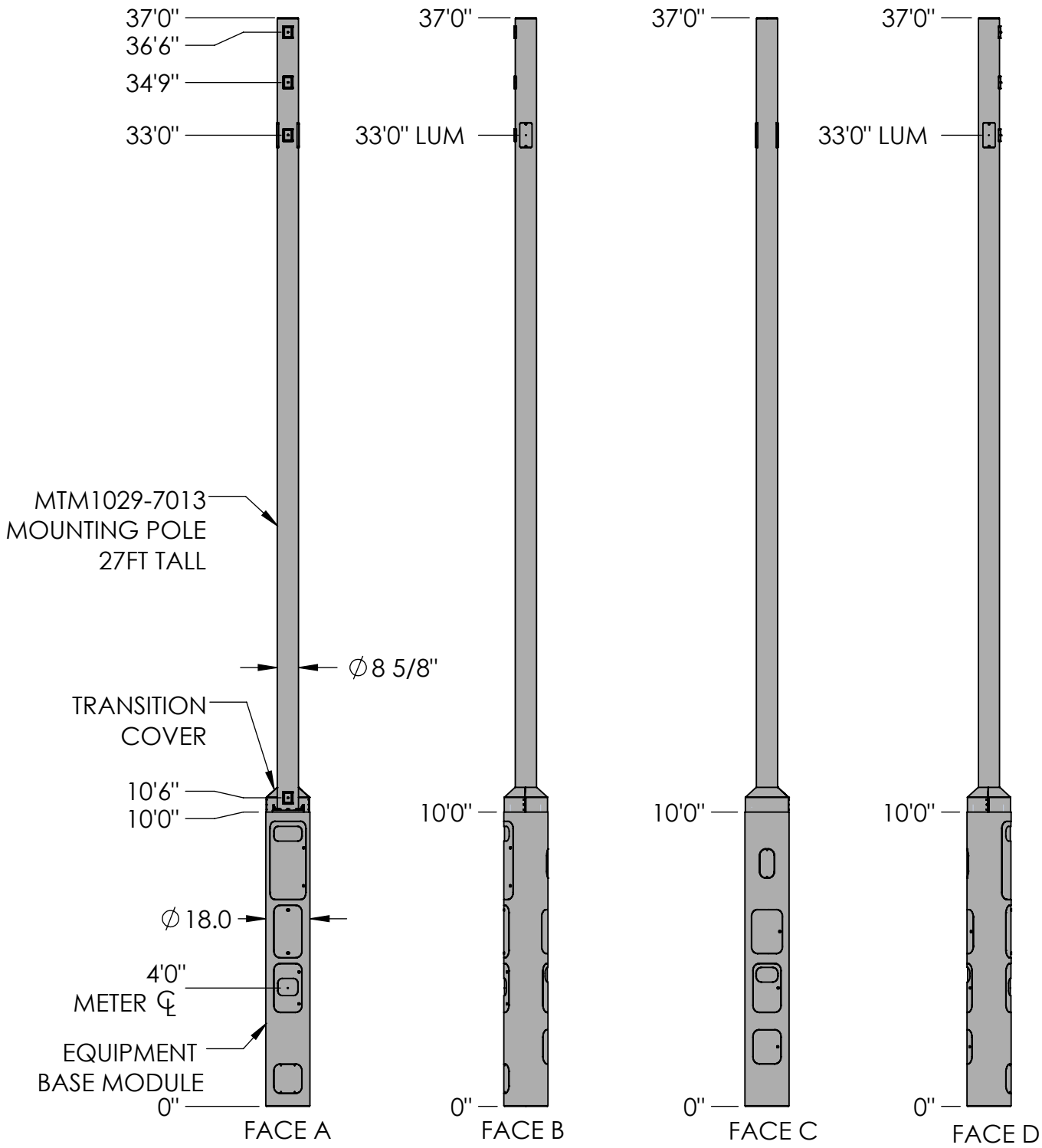

These drawings and specifications are the proprietary property of CommScope Inc. and may be used only for the specific purpose authorized in writing by CommScope Inc.

ALL DIMENSIONS ARE IN INCHES U.O.S.
TOLERANCES UNLESS OTHERWISE SPECIFIED:

.X = ±	.12	ANGLES	±2°
.XX = ±	.06	FRACTIONS	±1/32
.XXX= ±	.031		

REMOVE BURRS AND BREAK EDGES .005

DO NOT SCALE THIS PRINT

DRAWN BY: MJP	SHEET: 1 of 1	PART NUMBER: 760239946xx37xx
CHECKED BY:	SCALE:	DESCRIPTION: METRO CELL, 18 IN INTEGRATED POLE SOLUTION
DATE:	MATERIAL:	DRAWING TYPE:
REVISION: B	FINISH:	ANDREW, an Amphenol company
	WEIGHT:	

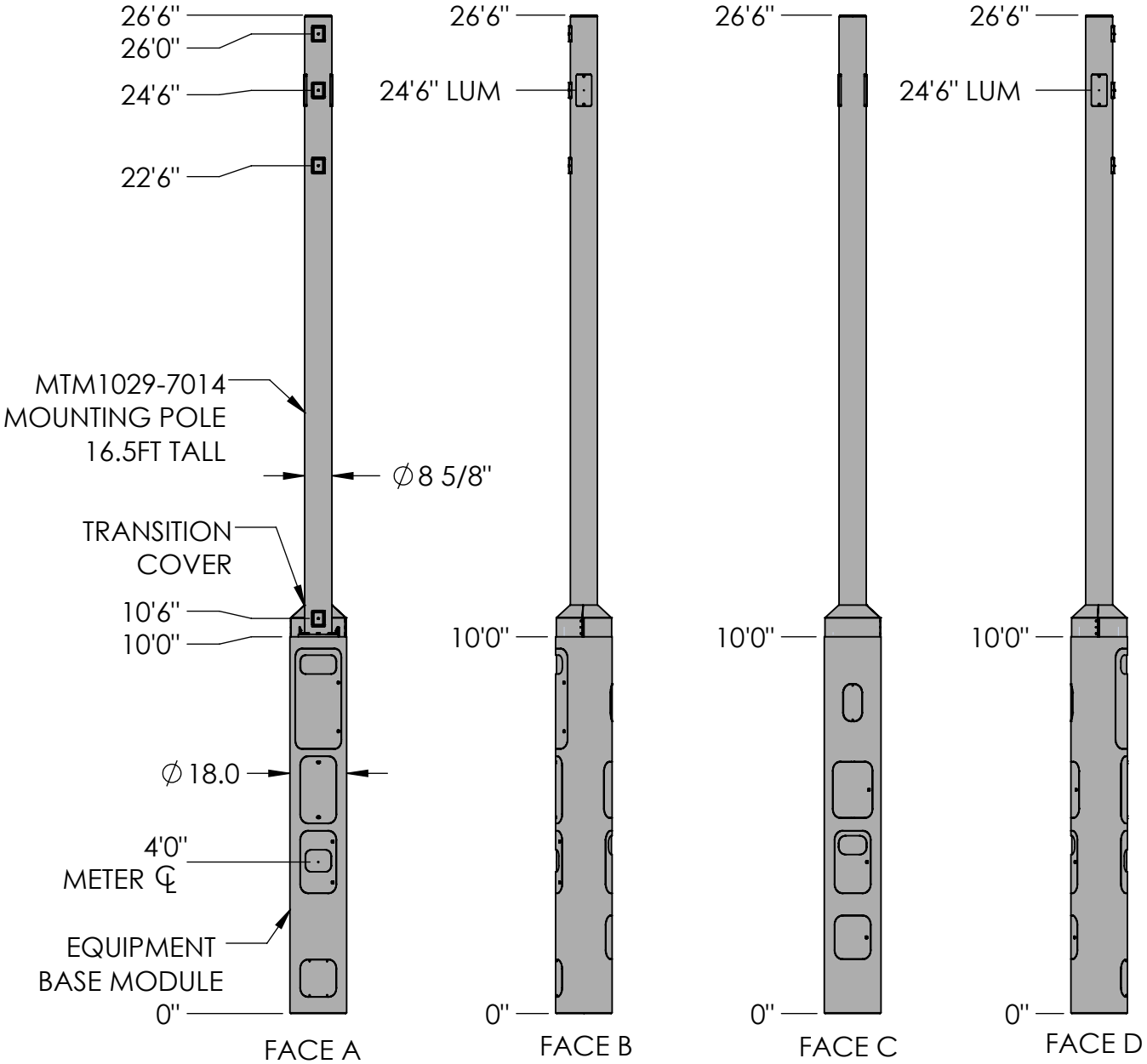

These drawings and specifications are the proprietary property of CommScope Inc. and may be used only for the specific purpose authorized in writing by CommScope Inc.

ALL DIMENSIONS ARE IN INCHES U.O.S.
TOLERANCES UNLESS OTHERWISE SPECIFIED:

.X = ±	.12	ANGLES	±2°
.XX = ±	.06	FRACTIONS	±1/32
.XXX= ±	.031		

REMOVE BURRS AND BREAK EDGES .005

DO NOT SCALE THIS PRINT

DRAWN BY: MJP	SHEET: 1 of 1	PART NUMBER: 760239946xx27xx
CHECKED BY:	SCALE:	DESCRIPTION: METRO CELL, 18 IN INTEGRATED POLE SOLUTION
DATE:	MATERIAL:	DRAWING TYPE:
REVISION: B	FINISH:	ANDREW. an Amphenol company
	WEIGHT:	

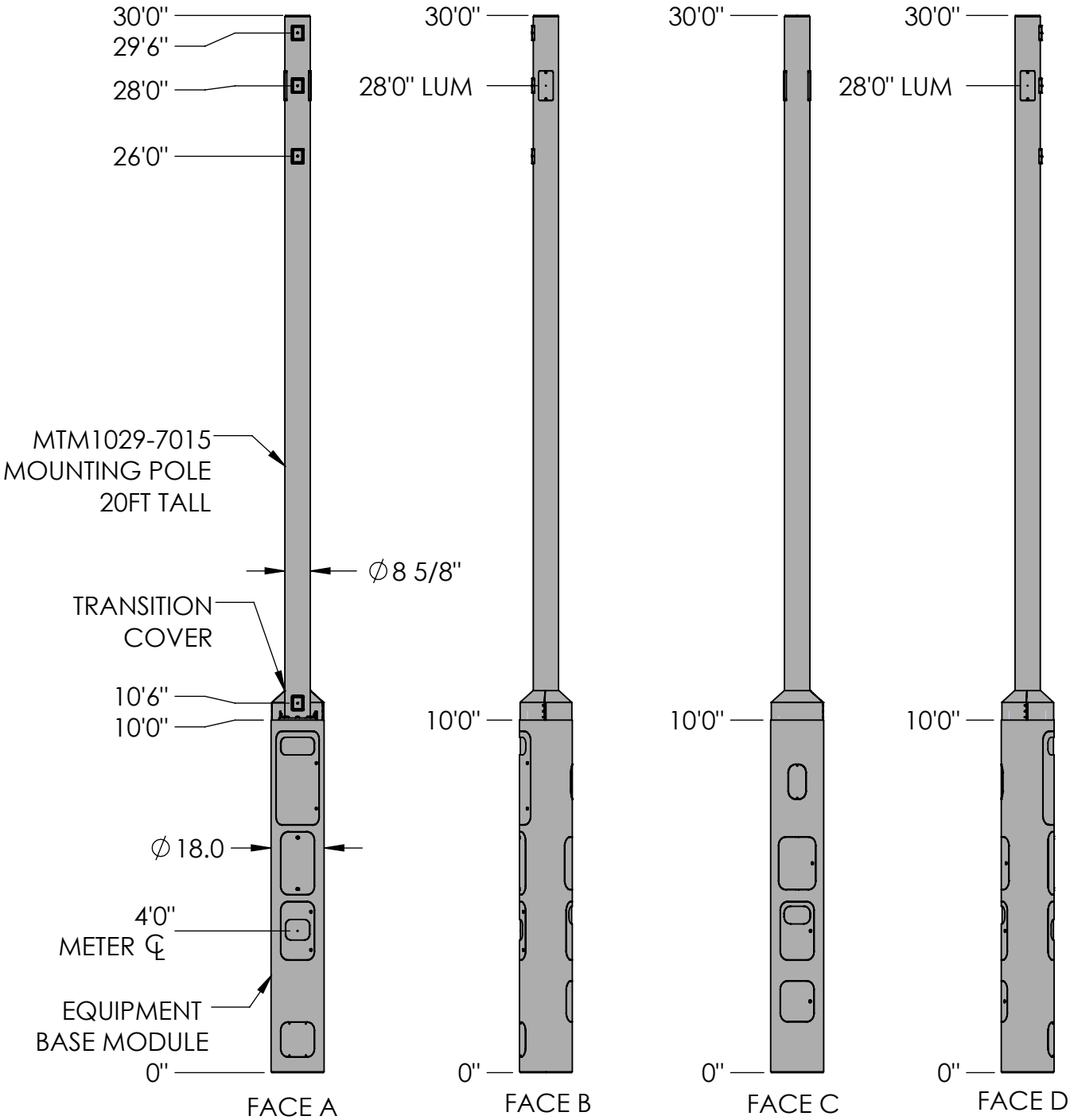

These drawings and specifications are the proprietary property of CommScope Inc. and may be used only for the specific purpose authorized in writing by CommScope Inc.

ALL DIMENSIONS ARE IN INCHES U.O.S.
TOLERANCES UNLESS OTHERWISE SPECIFIED:

.X = ±	.12	ANGLES	±2°
.XX = ±	.06	FRACTIONS	±1/32
.XXX= ±	.031		

REMOVE BURRS AND BREAK EDGES .005

DO NOT SCALE THIS PRINT

DRAWN BY: MJP	SHEET: 1 of 1	PART NUMBER: 760239946xx30xx
CHECKED BY:	SCALE:	DESCRIPTION: METRO CELL, 18 IN INTEGRATED POLE SOLUTION
DATE:	MATERIAL:	DRAWING TYPE:
REVISION: B	FINISH:	ANDREW an Amphenol company
	WEIGHT:	

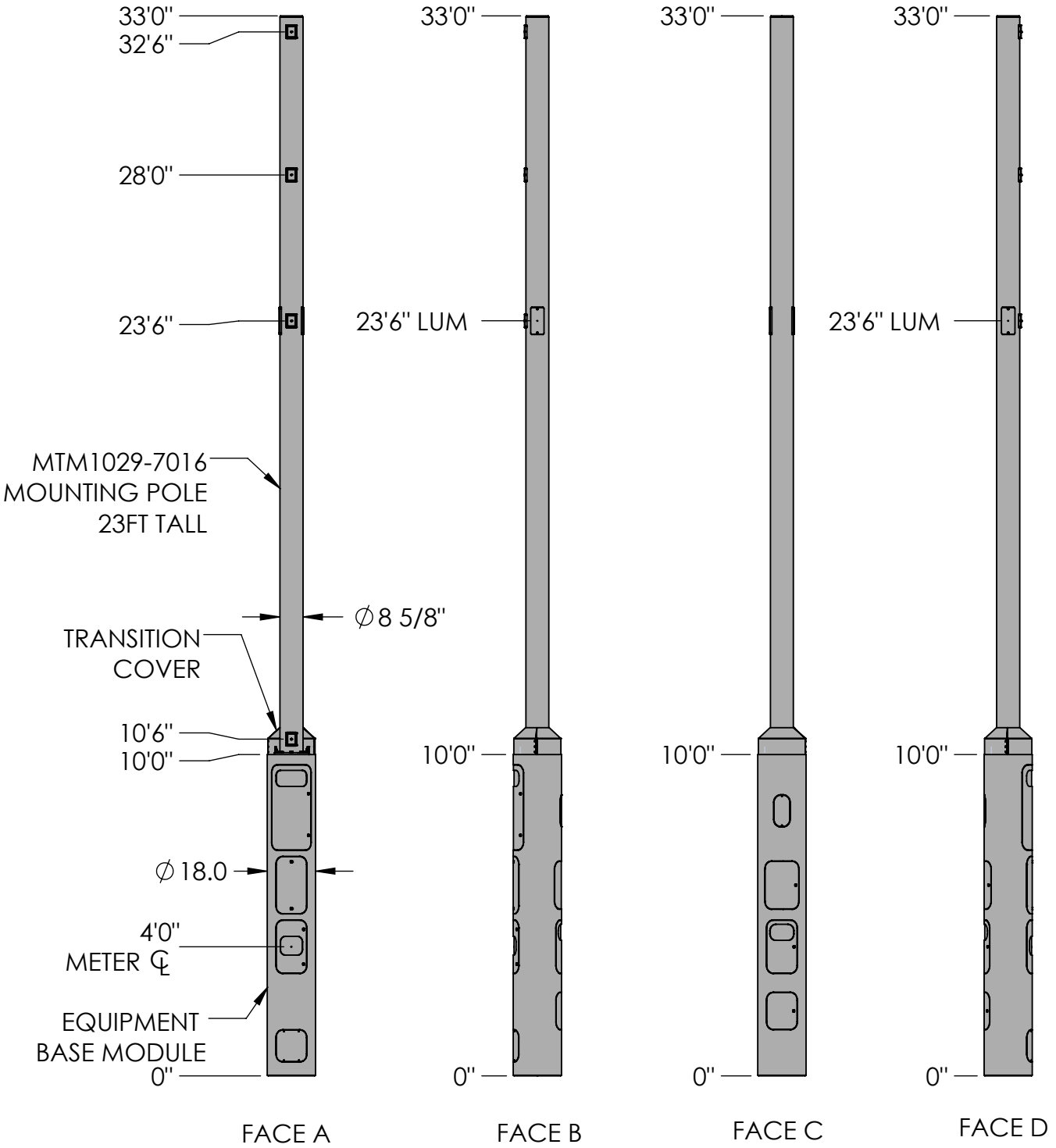

These drawings and specifications are the proprietary property of CommScope Inc. and may be used only for the specific purpose authorized in writing by CommScope Inc.

ALL DIMENSIONS ARE IN INCHES U.O.S.
TOLERANCES UNLESS OTHERWISE SPECIFIED:

.X = ±	.12	ANGLES	±2°
.XX = ±	.06	FRACTIONS	±1/32
.XXX= ±	.031		

REMOVE BURRS AND BREAK EDGES .005

DO NOT SCALE THIS PRINT

DRAWN BY: MJP	SHEET: 1 of 1	PART NUMBER: 760239946xx33xx
CHECKED BY:	SCALE:	DESCRIPTION: METRO CELL, 18 IN INTEGRATED POLE SOLUTION
DATE:	MATERIAL:	DRAWING TYPE:
REVISION: B	FINISH:	ANDREW an Amphenol company
	WEIGHT:	

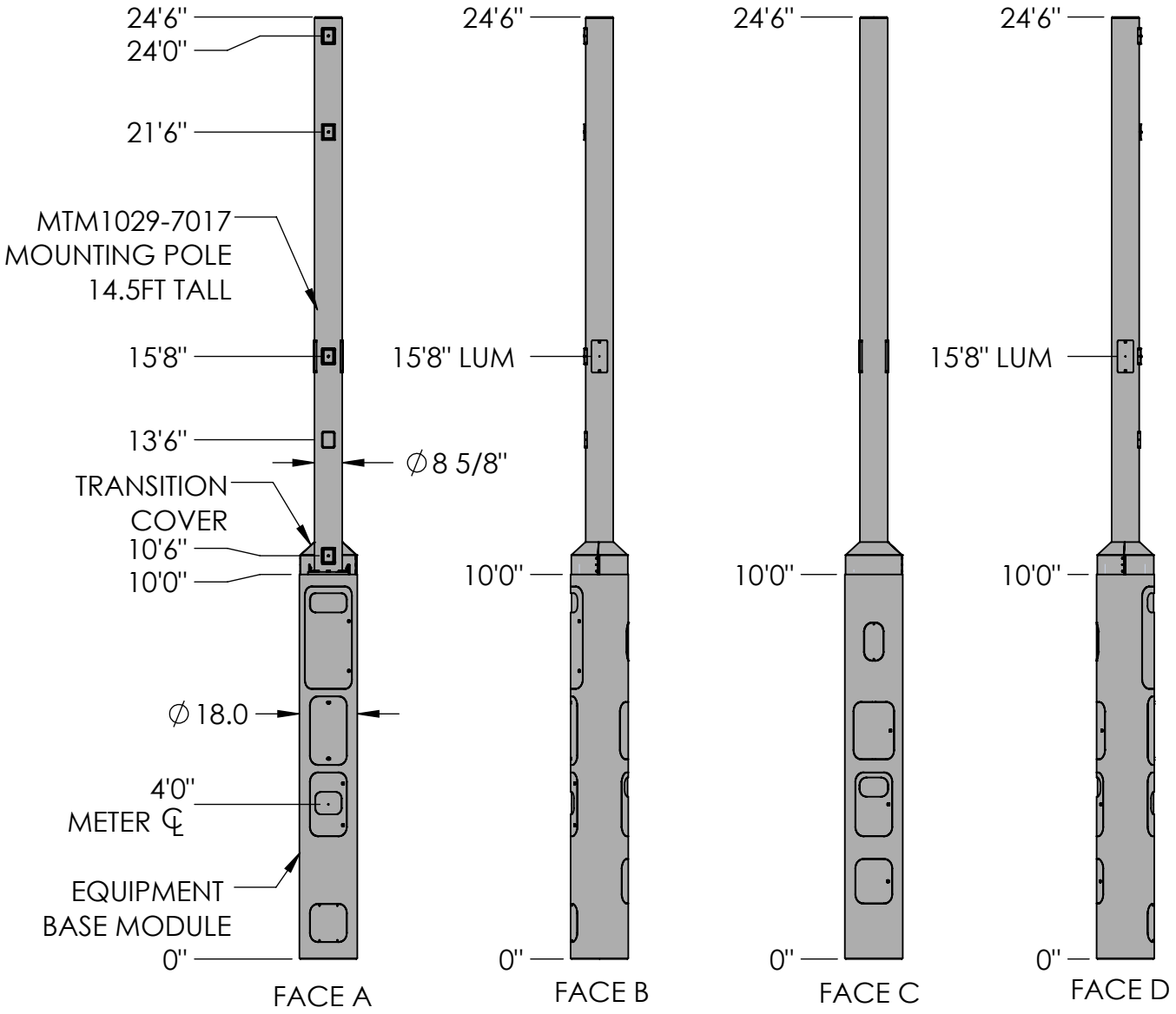

These drawings and specifications are the proprietary property of CommScope Inc. and may be used only for the specific purpose authorized in writing by CommScope Inc.

ALL DIMENSIONS ARE IN INCHES U.O.S.
TOLERANCES UNLESS OTHERWISE SPECIFIED:

.X = ±	.12	ANGLES	±2°
.XX = ±	.06	FRACTIONS	±1/32
.XXX= ±	.031		

REMOVE BURRS AND BREAK EDGES .005

DO NOT SCALE THIS PRINT

DRAWN BY: MJP	SHEET: 1 of 1	PART NUMBER: 760239946xx25xx
CHECKED BY:	SCALE:	DESCRIPTION: METRO CELL, 18 IN INTEGRATED POLE SOLUTION
DATE:	MATERIAL:	DRAWING TYPE:
REVISION: B	FINISH:	ANDREW. an Amphenol company
	WEIGHT:	

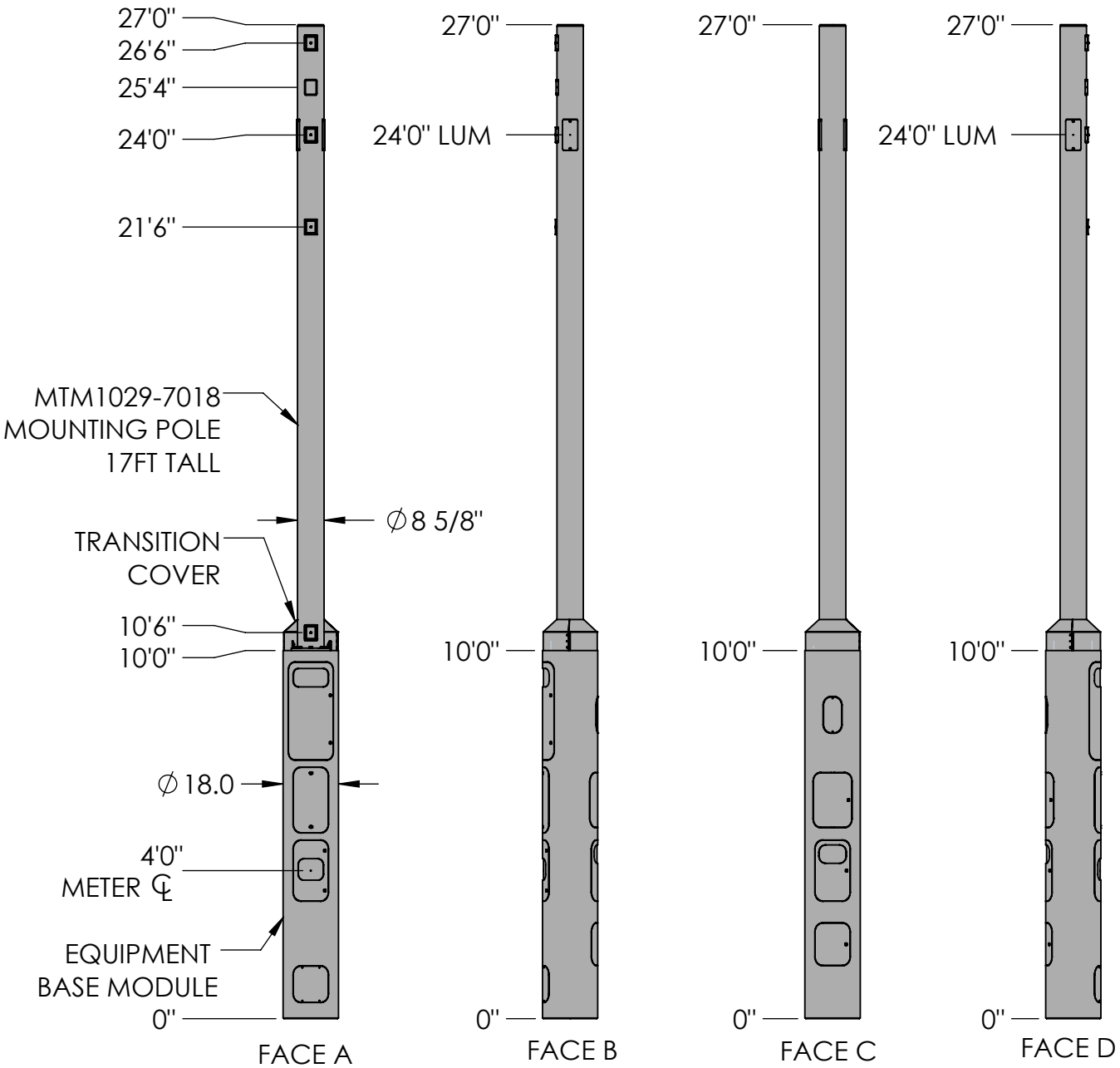

These drawings and specifications are the proprietary property of CommScope Inc. and may be used only for the specific purpose authorized in writing by CommScope Inc.

ALL DIMENSIONS ARE IN INCHES U.O.S.
TOLERANCES UNLESS OTHERWISE SPECIFIED:

.X = ±	.12	ANGLES	±2°
.XX = ±	.06	FRACTIONS	±1/32
.XXX= ±	.031		

REMOVE BURRS AND BREAK EDGES .005

DO NOT SCALE THIS PRINT

DRAWN BY: MJP	SHEET: 1 of 1	PART NUMBER: 760239946xx27xx
CHECKED BY:	SCALE:	DESCRIPTION: METRO CELL, 18 IN INTEGRATED POLE SOLUTION
DATE:	MATERIAL:	DRAWING TYPE:
REVISION: B	FINISH:	ANDREW an Amphenol company
	WEIGHT:	

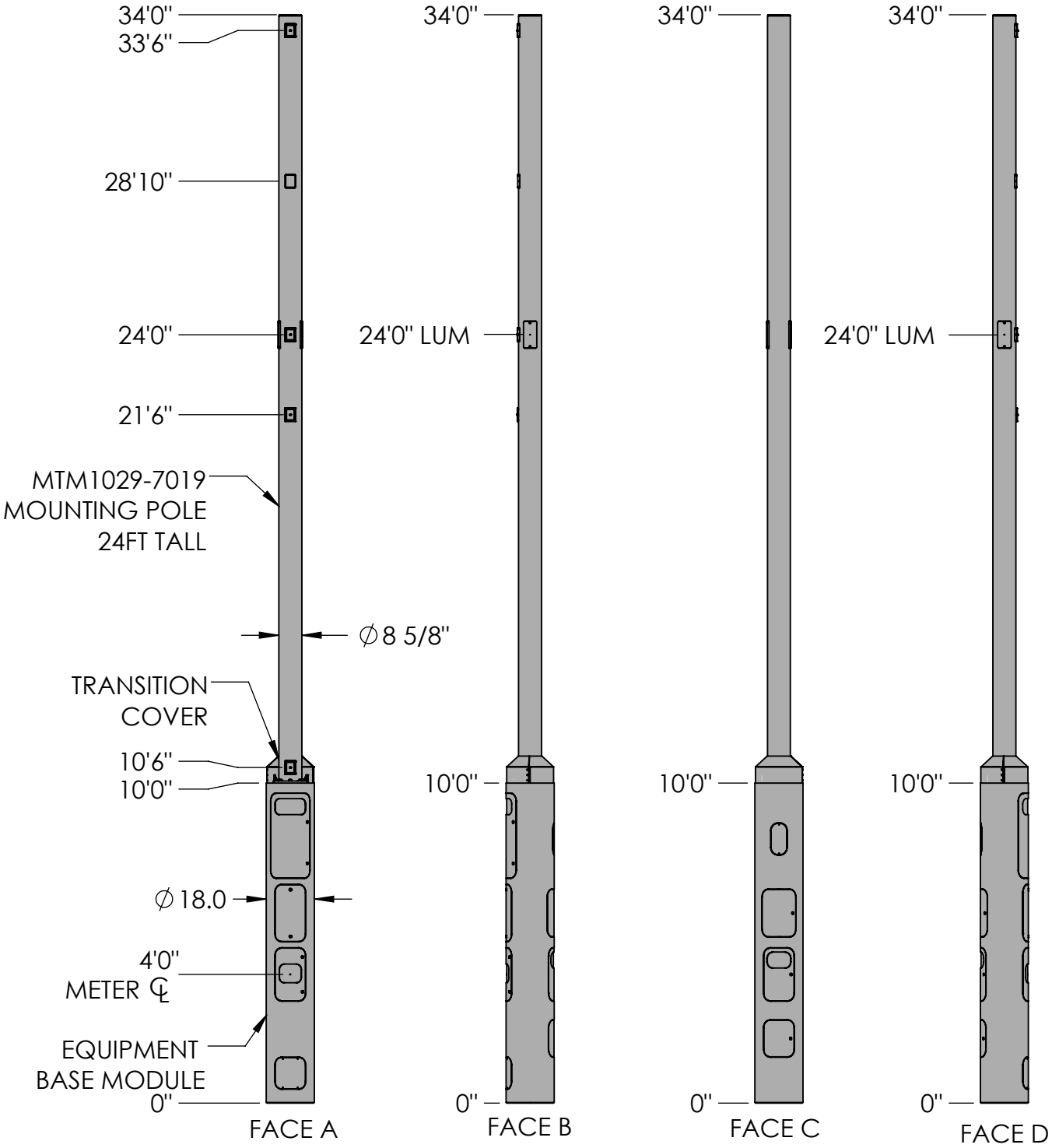

These drawings and specifications are the proprietary property of CommScope Inc. and may be used only for the specific purpose authorized in writing by CommScope Inc.

ALL DIMENSIONS ARE IN INCHES U.O.S.
TOLERANCES UNLESS OTHERWISE SPECIFIED:

.X = ±	.12	ANGLES	±2°
.XX = ±	.06	FRACTIONS	±1/32
.XXX= ±	.031		

REMOVE BURRS AND BREAK EDGES .005

DO NOT SCALE THIS PRINT

DRAWN BY: MJP	SHEET: 1 of 1	PART NUMBER: 760239946xx34xx
CHECKED BY:	SCALE:	DESCRIPTION: METRO CELL, 18 IN INTEGRATED POLE SOLUTION
DATE:	MATERIAL:	DRAWING TYPE:
REVISION: B	FINISH:	ANDREW an Amphenol company
	WEIGHT:	

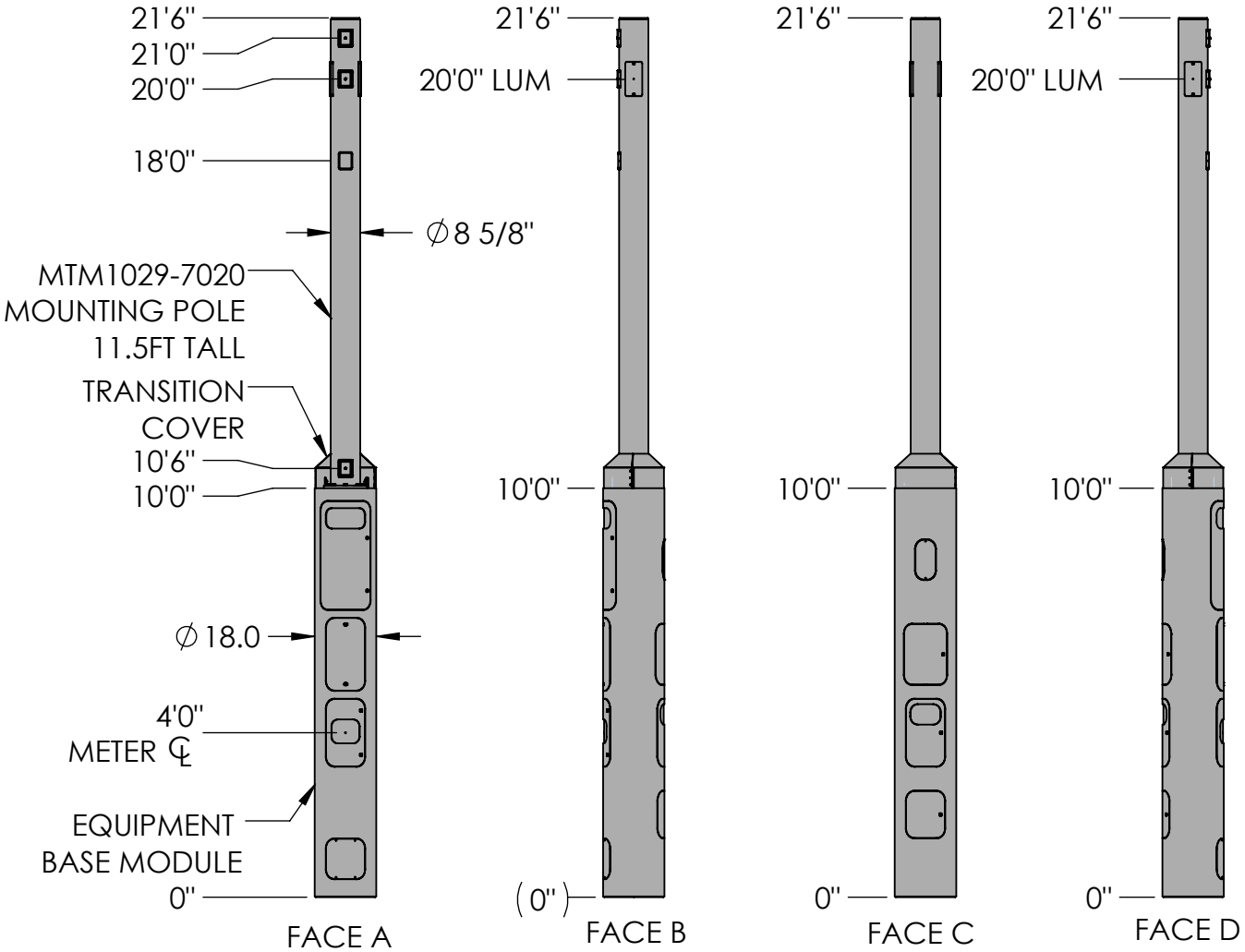

These drawings and specifications are the proprietary property of CommScope Inc. and may be used only for the specific purpose authorized in writing by CommScope Inc.

ALL DIMENSIONS ARE IN INCHES U.O.S.
TOLERANCES UNLESS OTHERWISE SPECIFIED:

.X = ±	.12	ANGLES	±2°
.XX = ±	.06	FRACTIONS	±1/32
.XXX= ±	.031		

REMOVE BURRS AND BREAK EDGES .005

DO NOT SCALE THIS PRINT

DRAWN BY: MJP	SHEET: 1 of 1	PART NUMBER: 760239946xx22xx
CHECKED BY:	SCALE:	DESCRIPTION: METRO CELL, 18 IN INTEGRATED POLE SOLUTION
DATE:	MATERIAL:	DRAWING TYPE:
REVISION: B	FINISH:	ANDREW an Amphenol company
	WEIGHT:	

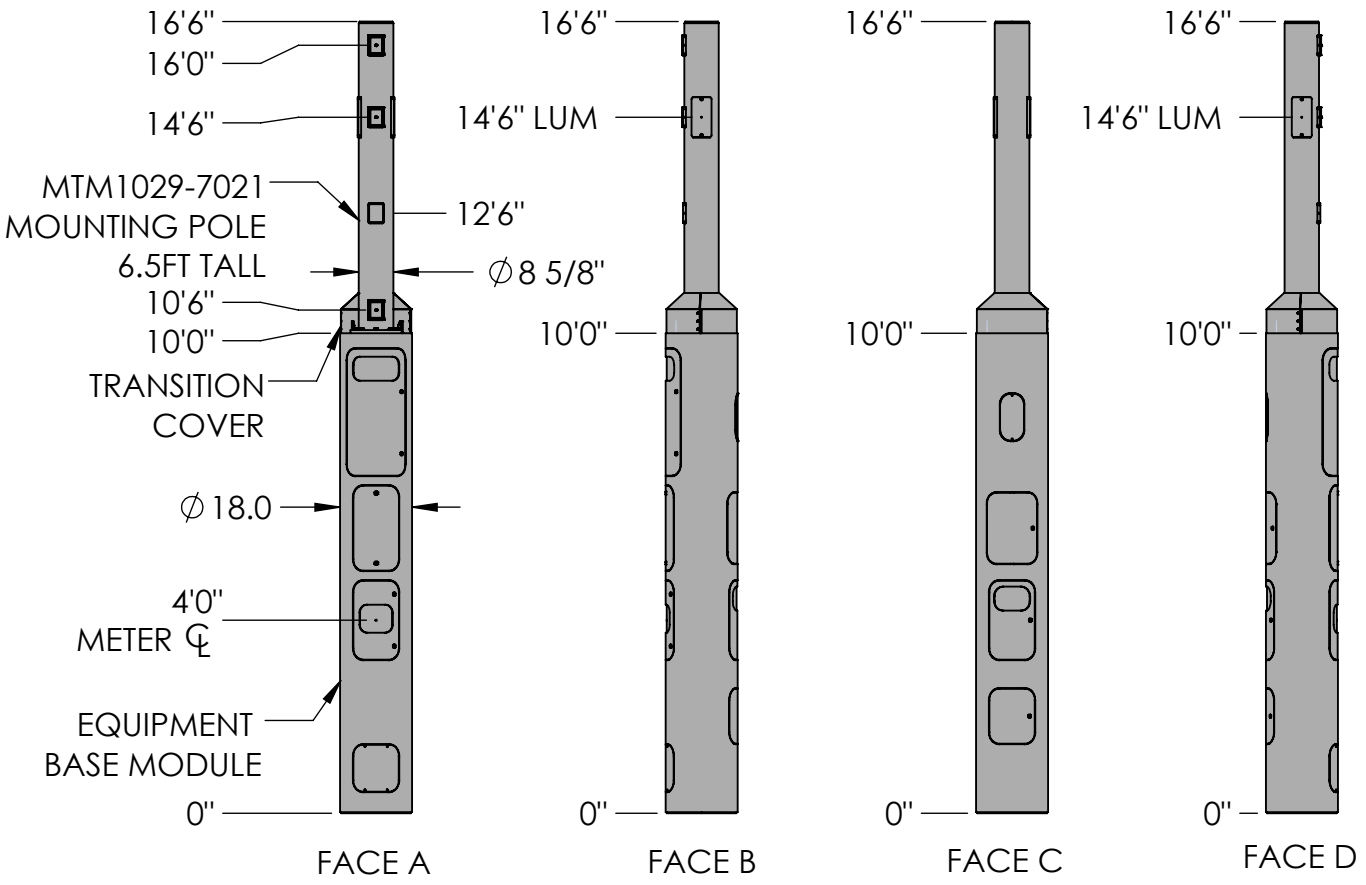

These drawings and specifications are the proprietary property of CommScope Inc. and may be used only for the specific purpose authorized in writing by CommScope Inc.

ALL DIMENSIONS ARE IN INCHES U.O.S.
TOLERANCES UNLESS OTHERWISE SPECIFIED:

.X = ±	.12	ANGLES	±2°
.XX = ±	.06	FRACTIONS	±1/32
.XXX= ±	.031		

REMOVE BURRS AND BREAK EDGES .005

DO NOT SCALE THIS PRINT

DRAWN BY: MJP	SHEET: 1 of 1	PART NUMBER: 760239946xx17xx
CHECKED BY:	SCALE:	DESCRIPTION: METRO CELL, 18 IN INTEGRATED POLE SOLUTION
DATE:	MATERIAL:	DRAWING TYPE:
REVISION: B	FINISH:	ANDREW an Amphenol company
	WEIGHT:	

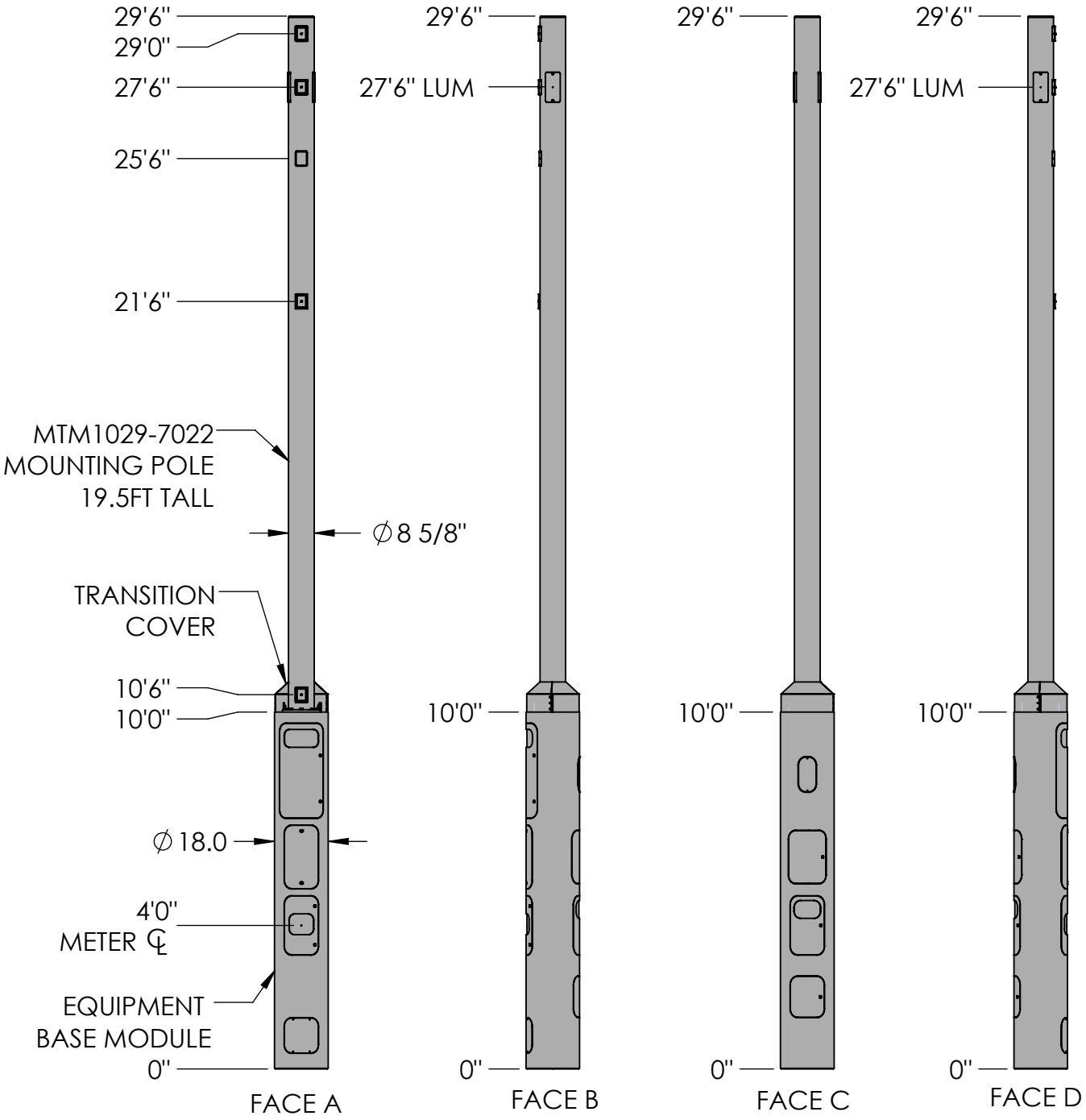

These drawings and specifications are the proprietary property of CommScope Inc. and may be used only for the specific purpose authorized in writing by CommScope Inc.

ALL DIMENSIONS ARE IN INCHES U.O.S.
TOLERANCES UNLESS OTHERWISE SPECIFIED:

.X = ±	.12	ANGLES	±2°
.XX = ±	.06	FRACTIONS	±1/32
.XXX= ±	.031		

REMOVE BURRS AND BREAK EDGES .005

DO NOT SCALE THIS PRINT

DRAWN BY: MJP	SHEET: 1 of 1	PART NUMBER: 760239946xx30xx
CHECKED BY:	SCALE:	DESCRIPTION: METRO CELL, 18 IN INTEGRATED POLE SOLUTION
DATE:	MATERIAL:	DRAWING TYPE:
REVISION: B	FINISH:	ANDREW an Amphenol company
	WEIGHT:	

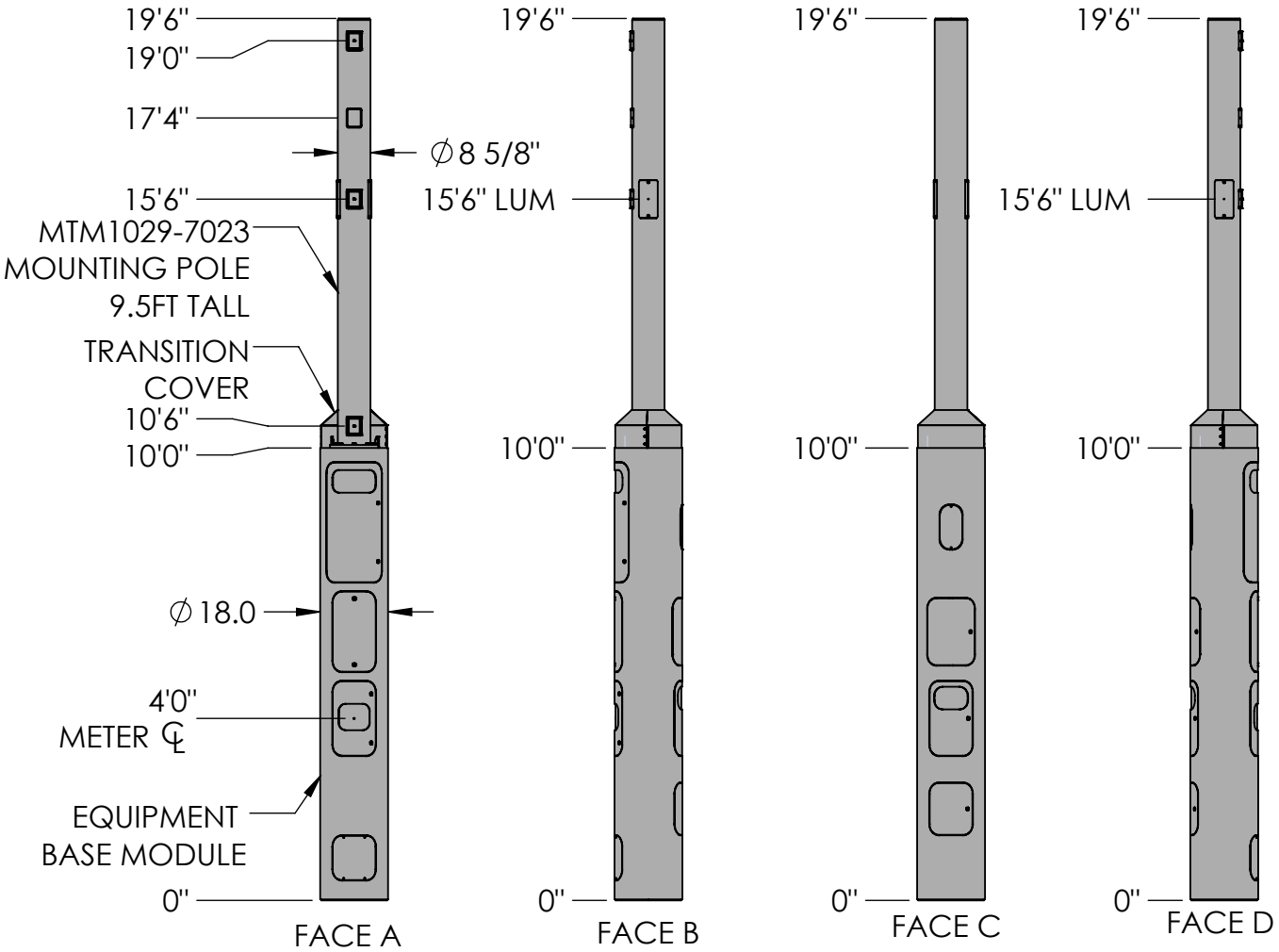

These drawings and specifications are the proprietary property of CommScope Inc. and may be used only for the specific purpose authorized in writing by CommScope Inc.

ALL DIMENSIONS ARE IN INCHES U.O.S.
TOLERANCES UNLESS OTHERWISE SPECIFIED:

.X = ±	.12	ANGLES	±2°
.XX = ±	.06	FRACTIONS	±1/32
.XXX= ±	.031		

REMOVE BURRS AND BREAK EDGES .005

DO NOT SCALE THIS PRINT

DRAWN BY: MJP	SHEET: 1 of 1	PART NUMBER: 760239946xx20xx
CHECKED BY:	SCALE:	DESCRIPTION: METRO CELL, 18 IN INTEGRATED POLE SOLUTION
DATE:	MATERIAL:	DRAWING TYPE:
REVISION: B	FINISH:	ANDREW an Amphenol company
	WEIGHT:	

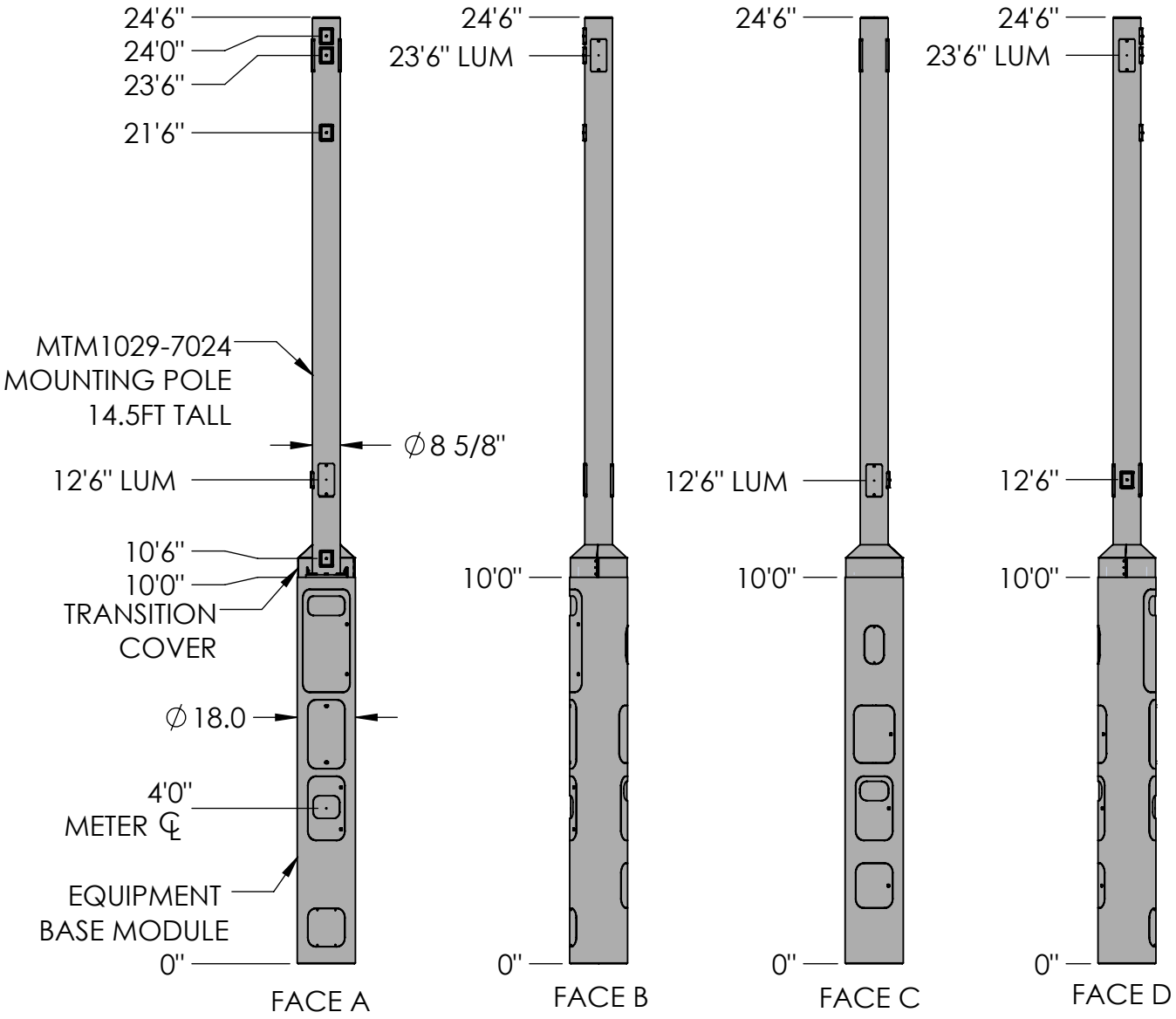

These drawings and specifications are the proprietary property of CommScope Inc. and may be used only for the specific purpose authorized in writing by CommScope Inc.

ALL DIMENSIONS ARE IN INCHES U.O.S.
TOLERANCES UNLESS OTHERWISE SPECIFIED:

.X = ±	.12	ANGLES	±2°
.XX = ±	.06	FRACTIONS	±1/32
.XXX= ±	.031		

REMOVE BURRS AND BREAK EDGES .005

DO NOT SCALE THIS PRINT

DRAWN BY: MJP	SHEET: 1 of 1	PART NUMBER: 760239946xx25xx
CHECKED BY:	SCALE:	DESCRIPTION: METRO CELL, 18 IN INTEGRATED POLE SOLUTION
DATE:	MATERIAL:	DRAWING TYPE:
REVISION: B	FINISH:	ANDREW. an Amphenol company
	WEIGHT:	