1.0 GENERAL NOTES
- 1.1 ALL METRIC DIMENSIONS ARE IN BRACKETS [X. X]
- 1.2 FOR PATENT INFO: https://www.adwpat.com

2.0 DESIGN NOTES

3.0 MANUFACTURING/SPECIAL REQUIREMENTS
- 3.1 TIGHTEN ALL BOLTS SECURING FLAT PLATES BY THE TURN-OF-NUT METHOD. TIGHTEN ALL U-BOLTS USING TURN-OF-NUT METHOD WITH ATTENTION TO LEAVE EQUAL DISTANCE AND EQUAL FORCE ON EACH LEG OF THE U-BOLT.

4.0 TEST

5.0 PACKAGING
- 5.1 PACKAGING SHALL MEET ANDREW REQUIREMENTS PER DOCUMENT IS-PL-3005
- 5.2 PRINTED DOCUMENT TO BE PLACED INSIDE POLYBAG AND THEN IN SHIPPING CONTAINER
- 5.3 EXTRA HARDWARE MAY BE SUPPLIED, BAGGED AND SHIPPED

REVISIONS			
REV.	DESCRIPTION	DATE	APPROVED
A	INITIAL RELEASE	MSM 16MAR11	TP
B	UPDATED BOM AND WEIGHT	MSM 05APR12	TP
C	EQ-P-AL(ITEM 10) QTY 10 WAS 6	NSUN 11SEP25	RW1043 50104903AMO

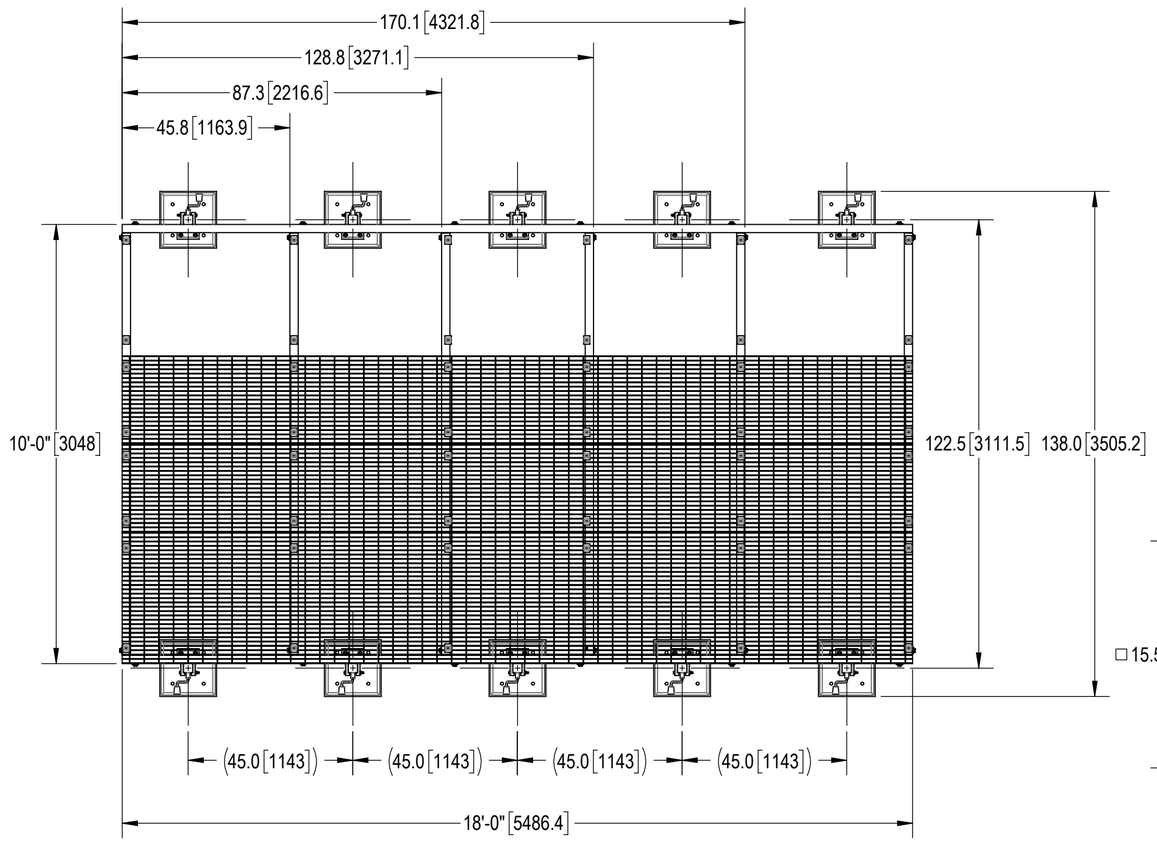

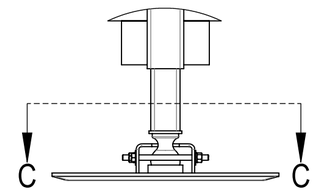

DETAIL B
SCALE 1 : 8

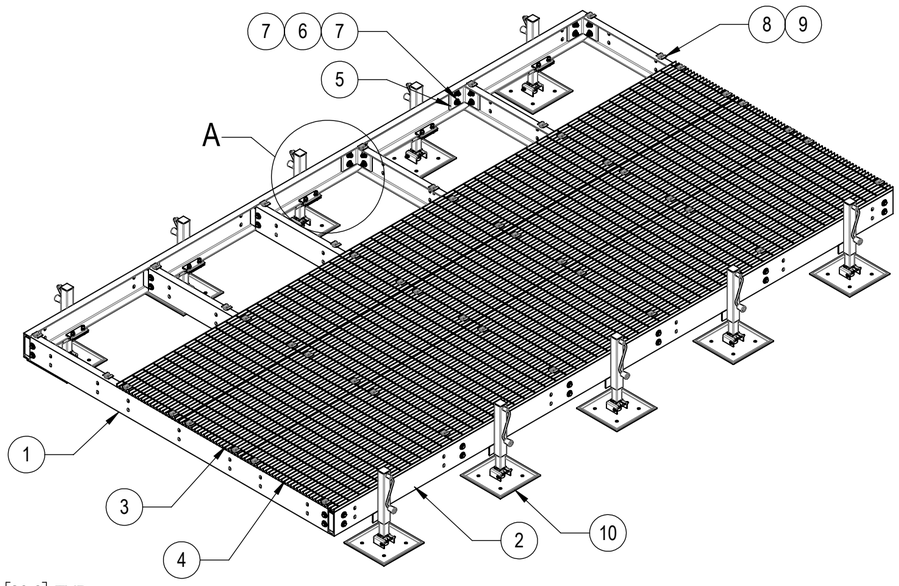

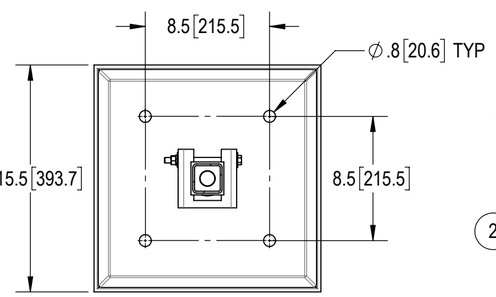

SECTION C-C
SCALE 1 : 8

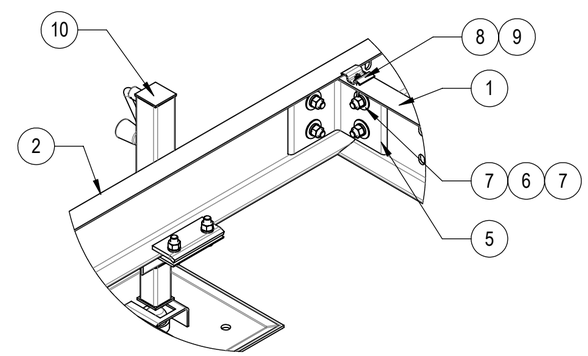

DETAIL A
SCALE 1 : 10

HIDE BAR GRATING FOR CLARITY

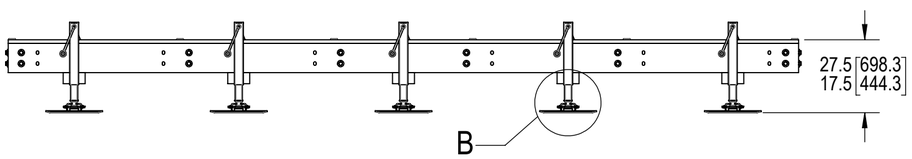

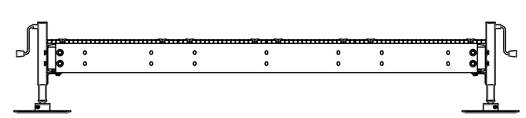

COMPONENT PART NUMBERS PROVIDED FOR ASSEMBLY PURPOSES;
INDIVIDUAL COMPONENTS MAY BE SHIPPED AS PARTS WITHIN AN INCLUDED KIT.

ITEM	PART NO.	DESCRIPTION	QTY.	WEIGHT	NOTE NO.
1	MTC7902101002	10' CENTER CHANNEL	6	108.98 LBS	
2	MTC7902101801	18' SIDE CHANNEL	2	204.61 LBS	
3	MTC7902101802	24" X 18' BAR GRATING	2	244.42 LBS	
4	MTC7902101803	36" X 18' BAR GRATING	2	362.47 LBS	
5	MTC790203	CHANNEL ADAPTER ANGLE	12	7.07 LBS	
6	GB-05205	5/8" X 2" GALV BOLT KIT	48	0.26 LBS	
7	GWF-05	5/8" GALV FLAT WASHER, 1.7OD	96	0.06 LBS	
8	MTC390324	BAR GRATING CLIP	48	0.17 LBS	
9	TS1220	12-24 X 2" SELF DRILLING SCREW	48	0.03 LBS	
10	EQ-P-AL	ADJ. LEG FOR EQUIPMENT PLATFORMS	10	56 LBS	

ANDREW® an Amphenol company

TOLERANCES
1 PLACE .X[.X] ± 0.12[3.0]
2 PLACE .XX[.X] ± 0.06[1.5]
3 PLACE .XXX[.X] ± 0.03[0.8]
ANGLES ± 2°

SAP MATERIAL MASTER: **EQ-P1018-AL**

FINISH

MATERIAL

UNLESS OTHERWISE SPECIFIED DIMENSIONS ARE IN INCHES INTERPRET PER ANSI Y 14.5M-1994

	NAME	DATE
CE	MSM	16MAR11
RW	NSUN	09/11/2025
AD		
RE		
ECN	50104903AMO	

TITLE: **10'X18' EQUIPMENT PLATFORM (10) EQ-P-AL**

SCALE: **1:12**

DOCUMENT NO.: **EQ-P1018-AL**

DENSITY		lbs/in³
MASS	2954.26	lbs
VOLUME	9999.84	in³
SURFACE AREA	99611.35	in²
HEIGHT	18.0"	
LENGTH	216.0"	
WIDTH	138.0"	

SIZE: **C**

Auth Group: INSL

MODEL VERSION	MODEL STATUS	MODEL REVISION	DRAWING VERSION	DRAWING STATUS	DRAWING REVISION	SHEET
01	RW	C	01	RW	C	1 OF 1

Confidential